F.A.I. RTE.	SECTION	COUNTY	TOTAL SHEETS	SHEET NO.
80/94	2626.2-R-1	COOK	452	308
STA.		TO STA.		
FED. ROAD DIST. NO.		ILLINOIS	FED. AID PROJECT	
CONTRACT NO. 62113			INDOT DES. NO 0100987	

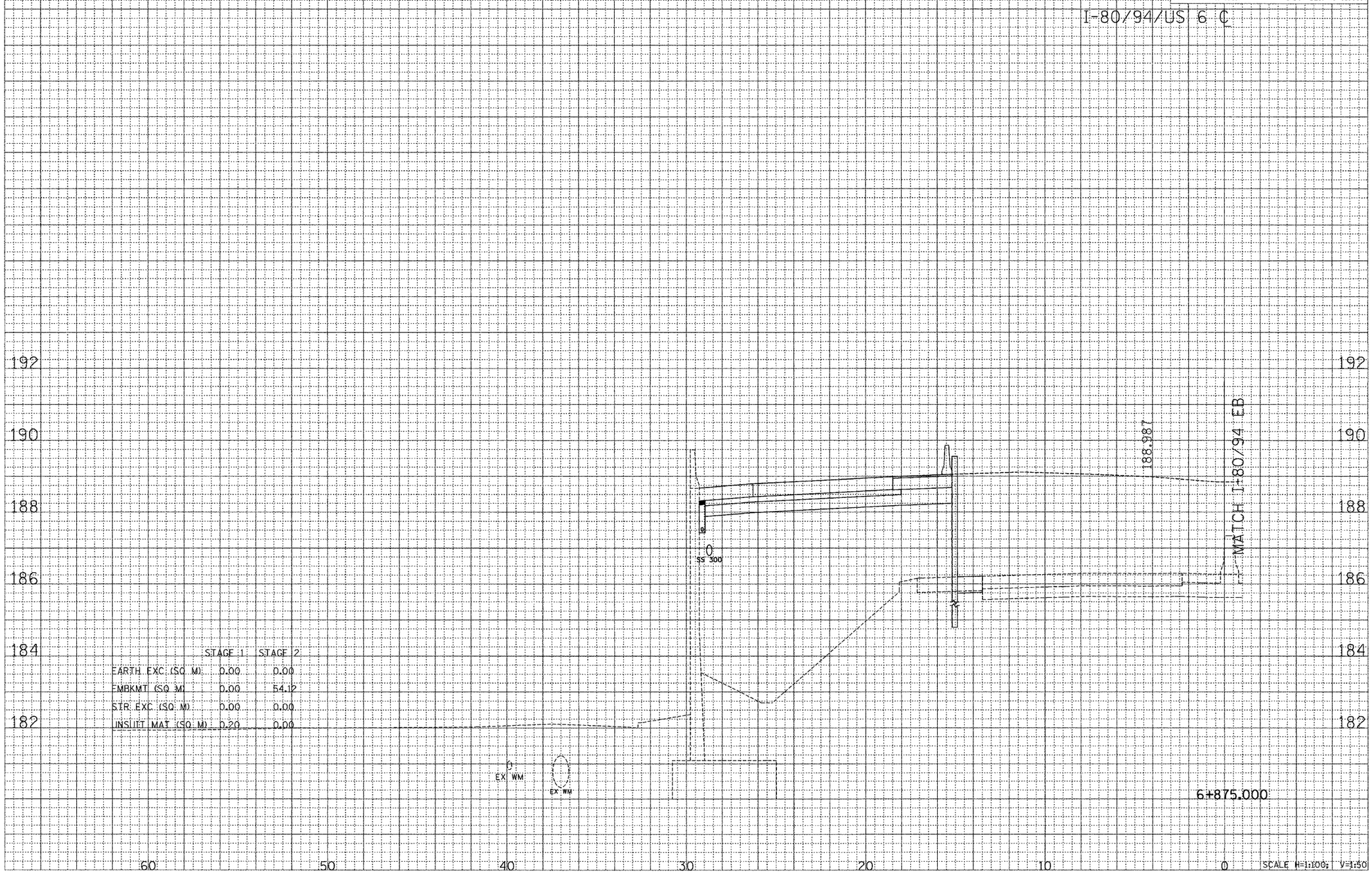

	STAGE 1	STAGE 2
EARTH EXC (SQ M)	0.00	0.00
EMBKMT (SQ M)	0.00	54.12
STR EXC (SQ M)	0.00	0.00
UNSUIT MAT (SQ M)	0.20	0.00

CROSS SECTION - I-80/94/US 6