ROUTE NO.	SECTION	COUNTY	TOTAL SHEETS	SHEET NO.
F.A.I. 80/94	2626.2-R-2	LAKE COUNTY, INDIANA	452	294
		ILLINOIS FED. AID PROJECT-		

SHEET NO. S-62
72 SHEETS

CONTRACT NO. 62113 INDOT DES. NO. 0100987

Notes: Driving and bearing ends of pipe shall be cut square. The thickness of the shell shall be 6.35 mm with a tolerance of 5 % . The shell shall be according to Article 1006.05(a) of the Standard Specifications.

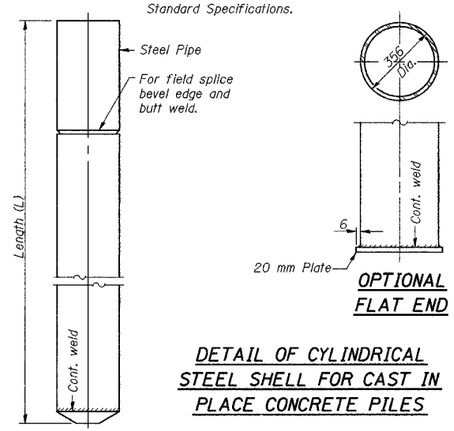

OPTIONAL FLAT END

DETAIL OF CYLINDRICAL STEEL SHELL FOR CAST IN PLACE CONCRETE PILES

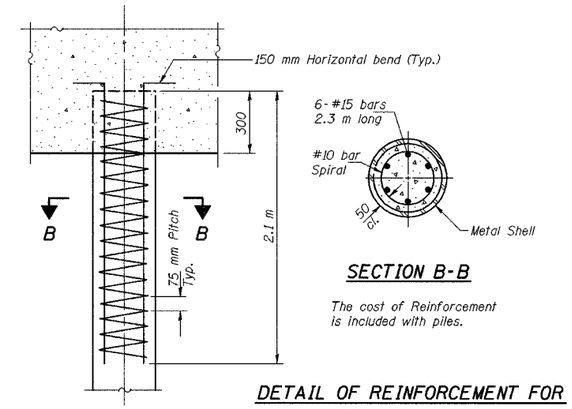

SECTION B-B

The cost of Reinforcement is included with piles.

DETAIL OF REINFORCEMENT FOR METAL SHELLS AT ABUTMENTS

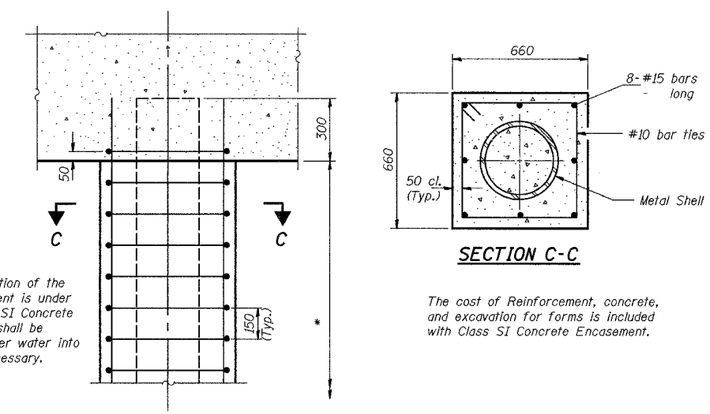

SECTION C-C

The cost of Reinforcement, concrete, and excavation for forms is included with Class SI Concrete Encasement.

* If a portion of the pile encasement is under water, Class SI Concrete Encasement shall be tremmied under water into forms as necessary.

DETAIL OF PROTECTION FOR METAL SHELLS AT PIERS

DESIGNED	BHS
CHECKED	KFA
DRAWN	MJB
CHECKED	GSP

X-PB (M) 10-31-02 (All dimensions are in millimeters (mm) except as noted.)

ILLINOIS DEPARTMENT OF TRANSPORTATION
F.A.I. ROUTE 80/94 (BORMAN EXPRESSWAY)
OVER LITTLE CALUMET RIVER & N.I.C.T.D. R.O.W.

CONCRETE PILE DETAILS
SECTION 2626.2-R-1
LAKE COUNTY, INDIANA
STATION 8+470.000
STRUCTURE NO. I-80-1-8460 (EB & WB)
(016-1003 & 016-1004)

DATE 07/04

AMERICAN CONSULTING ENGINEERS