ROUTE NO.	SECTION	COUNTY	TOTAL SHEETS	SHEET NO.
F.A.I. 80/94	2626.2-R-1	LAKE COUNTY, INDIANA	452	293
		RAILWAYS	PEO. AID PROJECT-	

SHEET NO. S-61
72 SHEETS

CONTRACT NO. 62113 INDOT DES. NO. 0100987

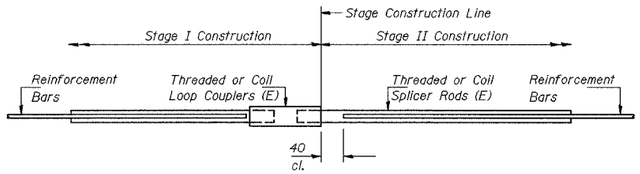

BAR SPLICER ASSEMBLY DETAIL

Bar Size	Phase 2 No. Assemblies Required	Location
15	1,465	Deck
15	12	W Abut
20	4	W Abut
25	3	W Abut
15	53	Pier 1
30	5	Pier 1
15	53	Pier 2
30	5	Pier 2
15	51	Pier 3
30	5	Pier 3
15	69	Pier 4
30	4	Pier 4
15	43	Pier 5
30	4	Pier 5
15	8	E Abut
20	4	E Abut
25	3	E Abut

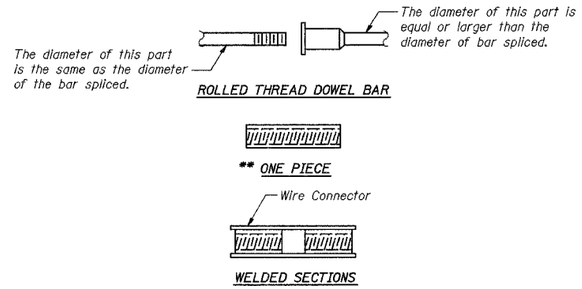

BAR SPLICER ASSEMBLY ALTERNATIVES

** Heavy Hex Nuts conforming to ASTM A 563M, Grade C, D or DH may be used.

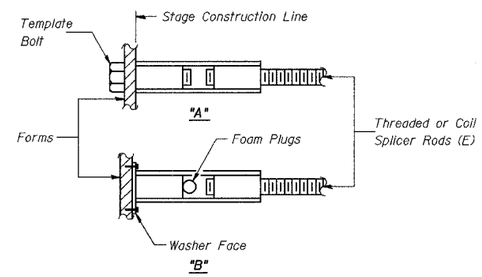

INSTALLATION AND SETTING METHODS

"A" : Set bar splicer assembly by means of a template bolt.
"B" : Set bar splicer assembly by nailing to wood forms or cementing to steel forms.
(E) : Indicates epoxy coating.

NOTES

Bar splicer assemblies shall be of an approved type and shall develop in tension at least 125 percent of the yield strength of the lapped reinforcement bars.

Splicer rods shall be of minimum 400 MPa yield strength, threaded or coiled full length.

All reinforcement bars shall be lapped and tied to the splicer rods or dowel bars.

Bar splicer assemblies shall be epoxy coated according to the requirements for reinforcement bars.

Other systems of similar design may be submitted to the Engineer for approval. Approval shall be based on certified test results from an approved testing laboratory that the proposed bar splicer assembly satisfies the following requirements:

① Minimum Capacity (Tension in kN) $= 1.25 \times 10^{-3} \times fy \times A_t$

② Minimum *Pull-out Strength (Tension in kN) $= 1.25 \times 10^{-3} \times fs_{allow} \times A_t$

Where fy = Yield strength of lapped reinforcement bars in MPa.
fs_{allow} = Allowable tensile stress in lapped reinforcement bars in MPa (Service Load)
A_t = Tensile stress area of lapped reinforcement bars (mm^2).
* = 28 day concrete

BAR SPLICER ASSEMBLIES			
Bar Size to be Spliced	Splicer Rod or Dowel Bar Length	Strength Requirements	
		Min. Capacity kN - tension	Min. Pull-Out Strength kN - tension
#15	640 mm	100	40
#20	790 mm	150	60
#25	1.320 m	250	100
#30	1.850 m	350	140

Bar splicer assemblies shall be according to Section 508 of the Standard Specifications, except as noted. The furnishing and installation of bar splicer assemblies will be measured and paid for at the contract unit price each for Threaded Tie Bar Assembly, Epoxy Coated.

All dimensions are in millimeters (mm) except as noted.

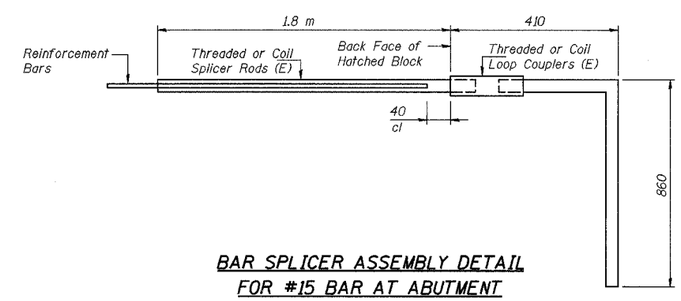

BAR SPLICER ASSEMBLY DETAIL FOR #15 BAR AT ABUTMENT

Min. Capacity = 100kN - tension
Min. Pull-out strength = 40kN tension
No. Required = 98 (Phase 2, Stage 2)
No. Required = xxx (Phase 3, Stage 2)
No. Required = xxx (Phase 3, Stage 3)

NOTE:

The unused half of the bar splicers shall be bundled together and clearly labeled with the structure number, size, and location within the structure. They shall be given to the Engineer for storage and use on a future contract. Cost included with Threaded Tie Bar Assembly, Epoxy Coated.

DESIGNED	BHS
CHECKED	KFA
DRAWN	MJB
CHECKED	GSP

BSD-1 (M) 9-01-03

PHASE 3 FOR INFORMATION ONLY

ILLINOIS DEPARTMENT OF TRANSPORTATION
F.A.I. ROUTE 80/94 (BORMAN EXPRESSWAY)
OVER LITTLE CALUMET RIVER & N.I.C.T.D. R.O.W.

BAR SPLICER (COUPLER) DETAILS
SECTION 2626.2-R-1
LAKE COUNTY, INDIANA
STATION 8+470.000
STRUCTURE NO. I-80-1-8460 (EB & WB)
(016-1003 & 016-1004)

DATE 07/04

AMERICAN CONSULTING ENGINEERS