ROUTE NO.	SECTION	COUNTY	TOTAL SHEETS	SHEET NO.
F.A.I. 80/94	2626.2-R-2	LAKE COUNTY, INDIANA	452	282
		ILLINOIS FED. AID PROJECT-		

SHEET NO. S-50
72 SHEETS

CONTRACT NO. 62113 INDOT DES. NO. 0100987

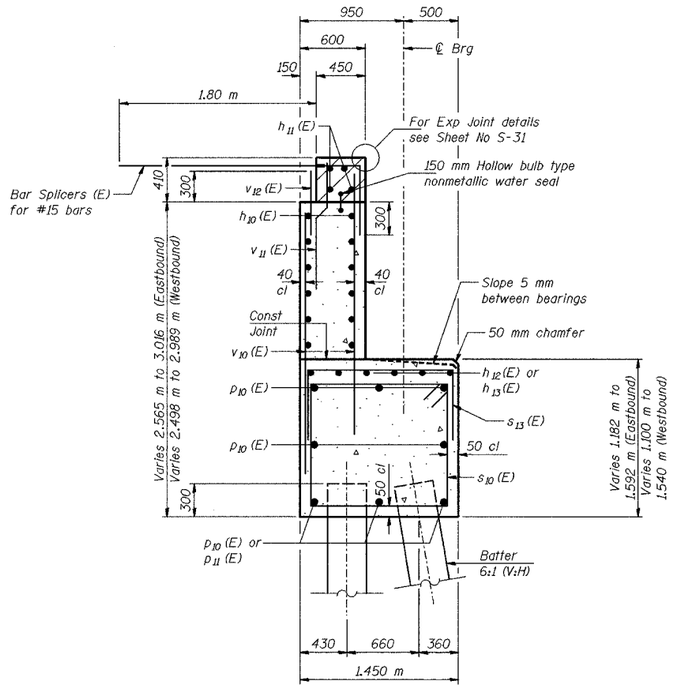

SECTION THRU ABUTMENT

WEST ABUTMENT BILL OF MATERIAL

PHASE 2

Bar	No.	Size	Length (m)	Shape
h_{10} (E)	24	#15	7.96	
h_{11} (E)	8	#20	8.03	
h_{12} (E)	12	#15	5.26	
h_{13} (E)	6	#15	2.02	
h_{14} (E)	6	#15	0.64	
h_{15} (E)	4	#15	1.00	
p_{10} (E)	16	#25	8.42	
p_{11} (E)	3	#25	2.28	
p_{12} (E)	3	#20	2.15	
s_{10} (E)	42	#15	5.16	
s_{11} (E)	6	#15	2.59	
s_{12} (E)	18	#15	3.81	
s_{13} (E)	39	#15	2.63	
v_{10} (E)	104	#15	2.38	
v_{11} (E)	52	#15	1.14	
v_{12} (E)	52	#15	0.60	
Test Pile, 356 mm		Each	1	
Structure Backfill		m^3	97	
Excavation, Foundation, Unclassified		m^3	99	
Concrete, A, Substructure		m^3	44.7	
Reinforcing Bars, Epoxy Coated		kg	2,320	
Pile, Concrete, Steel Shell Encased, 6.35mm, 356 mm		m	188.5	
Surface Seal (Estimated)		m^2	13	
Threaded Tie Bar Assembly, Epoxy Coated		Each	71	

PHASE 3

Bar	No.	Size	Length (m)	Shape
Test Pile, 356 mm			Each	
Structure Backfill			m^3	
Excavation, Foundation, Unclassified			m^3	
Concrete, A, Substructure			m^3	
Reinforcing Bars, Epoxy Coated			kg	
Pile, Concrete, Steel Shell Encased, 6.35mm, 356 mm			m	
Surface Seal (Estimated)			m^2	
Threaded Tie Bar Assembly, Epoxy Coated			Each	

PILE DATA

Type - 356 ϕ Metal Shell
Capacity - 368 kN
Est Length - 14.5 m
No Reqd - 55
Test Piles - 1

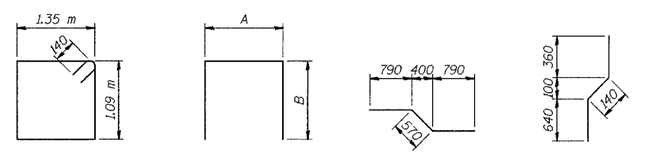

BAR s_{10}(E) BARS s_{11}(E), s_{12}(E), and s_{13}(E) BAR p_{12}(E) BAR v_{11}(E)

NOTES:

Space reinforcement in cap to miss anchor bolts.

Pour steps monolithically with cap.

Hatched area to be poured after superstructure forms have been removed. Quantity of concrete included with Concrete, C, Superstructure.

Reinforcement bars designated (E) shall be epoxy coated.

All dimensions are in millimeters (mm) except as noted.

All edges shall have standard 20 mm chamfers except as noted.

BAR DIMENSIONS

Bar	A	B
s_{11}(E)	1.09m	750
s_{12}(E)	1.49m	1.16m
s_{13}(E)	1.35m	640

MINIMUM BAR LAPS

#15 bars = 640
#20 bars = 790
#25 bars = 1320

DESIGNED	BHS
CHECKED	KFA
DRAWN	MJB
CHECKED	GSP

PHASE 3 FOR INFORMATION ONLY

ILLINOIS DEPARTMENT OF TRANSPORTATION
F.A.I. ROUTE 80/94 (BORMAN EXPRESSWAY)
OVER LITTLE CALUMET RIVER & N.I.C.T.D. R.O.W.

WEST ABUTMENT DETAILS
SECTION 2626.2-R-1
LAKE COUNTY, INDIANA
STATION 8+470.000
STRUCTURE NO. I-80-1-8460 (EB & WB)
(016-1003 & 016-1004)

DATE 07/04

AMERICAN CONSULTING ENGINEERS