ROUTE NO.	SECTION	COUNTY	TOTAL SHEETS	SHEET NO.
F.A.I. 80/94	2626.2-R-2	LAKE COUNTY, INDIANA	452	280
	P.I.-21029	FED. AID PROJECT-		

SHEET NO. S-48
72 SHEETS

CONTRACT NO. 62113 INDOT DES. NO. 0100987

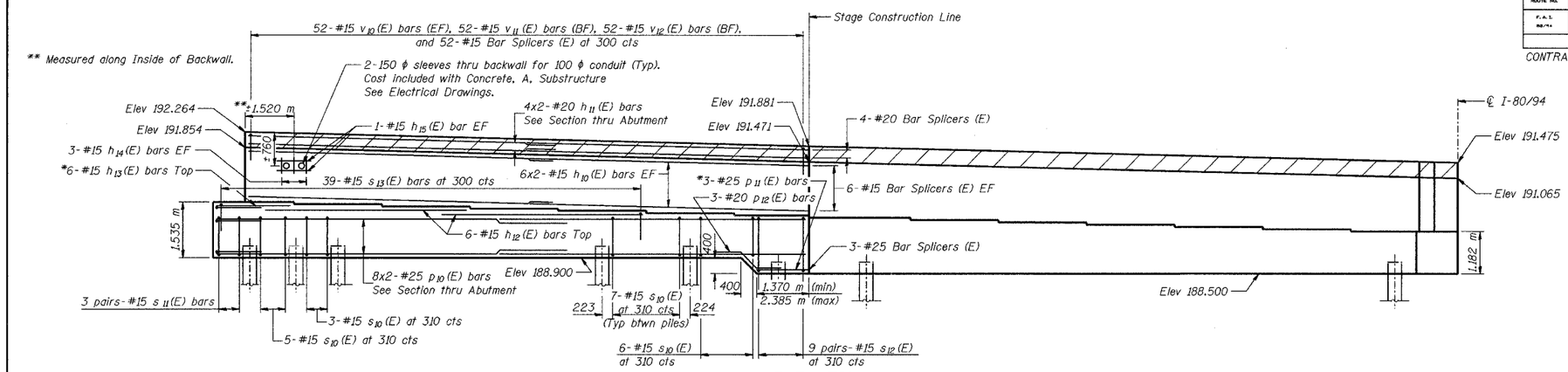

ELEVATION

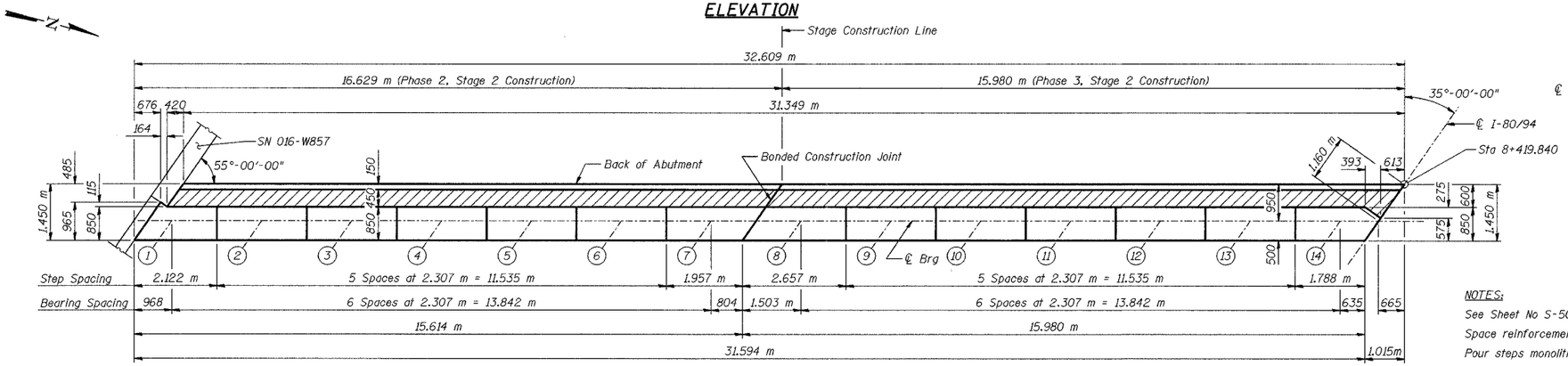

TOP VIEW

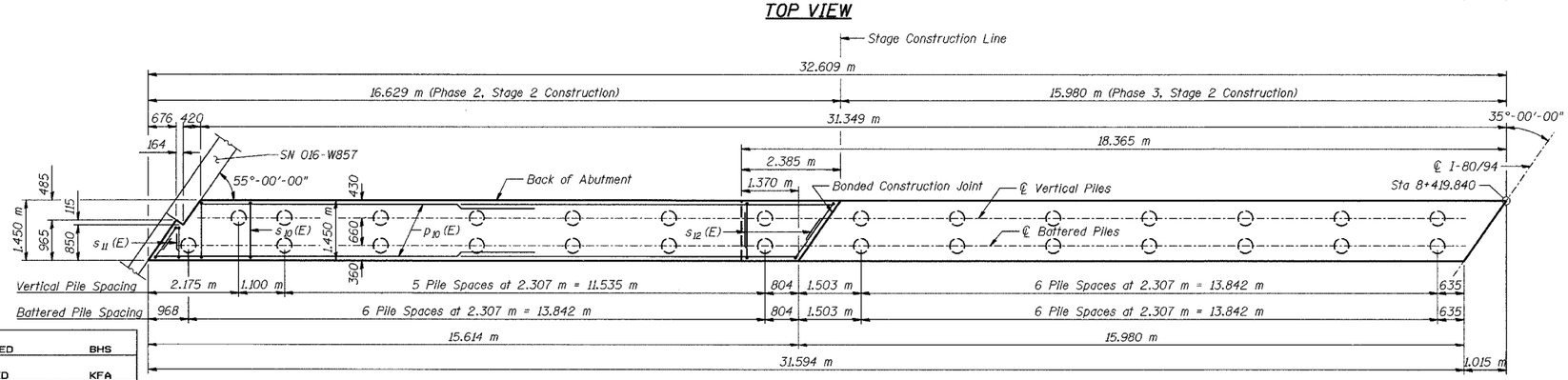

PLAN-PILE CAP

BEARING SEAT ELEVATIONS

Girder	Seat Elevation
14	189.682
13	189.741
12	189.800
11	189.859
10	189.917
9	189.975
8	190.034
7	190.092
6	190.149
5	190.207
4	190.264
3	190.321
2	190.379
1	190.435

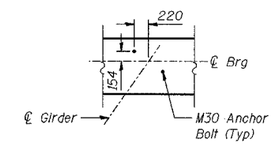

ANCHOR BOLT LAYOUT

LEGEND

EF - Each Face
BF - Back Face

MINIMUM BAR LAPS

#15 bars = 640
#20 bars = 790
#25 bars = 1320

NOTES:

See Sheet No S-50 for abutment details and Bill of Material.

Space reinforcement in cap to miss anchor bolts.

Pour steps monolithically with cap.

Hatched area to be poured after superstructure forms have been removed. Quantity of concrete included with Concrete, C, Superstructure.

Reinforcement bars designated (E) shall be epoxy coated.

Bars indicated thus 20 x 3-#15 etc. indicates 20 lines of bars with 3 lengths per line.

All dimensions are in millimeters (mm) except as noted.

All edges shall have standard 20 mm chamfers except as noted.

* Cut bars to fit in field.

Apply Surface Seal to top surface of abutment seat and vertical faces of steps.

DESIGNED	BHS
CHECKED	KFA
DRAWN	MJB
CHECKED	GSP

PHASE 3 FOR INFORMATION ONLY

ILLINOIS DEPARTMENT OF TRANSPORTATION
F.A.I. ROUTE 80/94 (BORMAN EXPRESSWAY)
OVER LITTLE CALUMET RIVER & N.I.C.T.D. R.O.W.

WEST ABUTMENT – EASTBOUND
SECTION 2626.2–R–1
LAKE COUNTY, INDIANA
STATION 8+470.000
STRUCTURE NO. I–80–1–8460 (EB & WB)
(016–I003 & 016–I004)

DATE 07/04

AMERICAN CONSULTING ENGINEERS