ROUTE NO.	SECTION	COUNTY	TOTAL SHEETS	SHEET NO.
F.A.I. 80/94	2626.2-R-2	LAKE COUNTY, INDIANA	452	274
	ILLINOIS	FED. AID PROJECT-		

SHEET NO. S-42
72 SHEETS

CONTRACT NO. 62113 INDOT DES. NO. 0100987

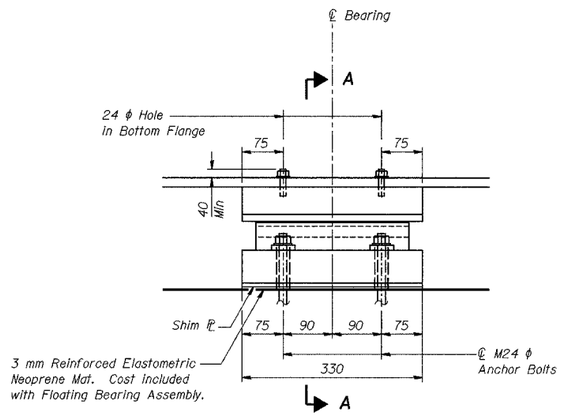

ELEVATION

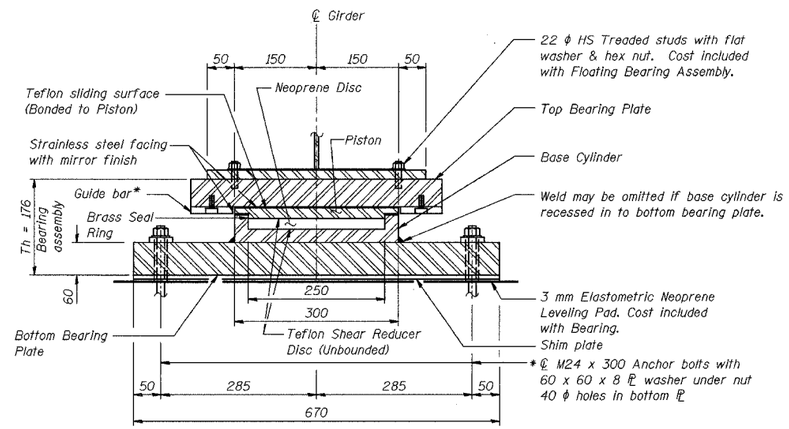

SECTION A-A

FLOATING BEARING AT PIER 1

* As alternates to bolted connection shown, the guide bars may be connected to the top bearing plate by groove welds or the guide bars and top bearing plate may be fabricated as a single piece.

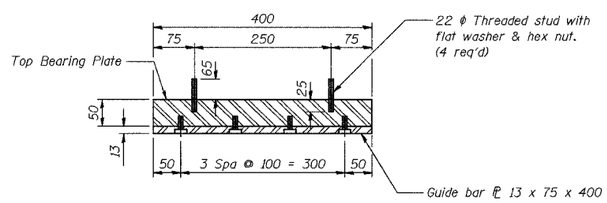

SECTION B-B

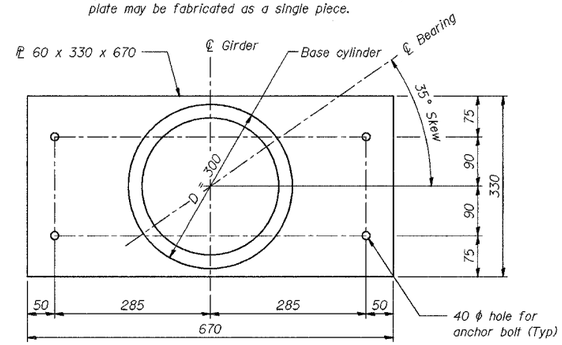

BOTTOM BEARING ℙ AND CYLINDER PLAN

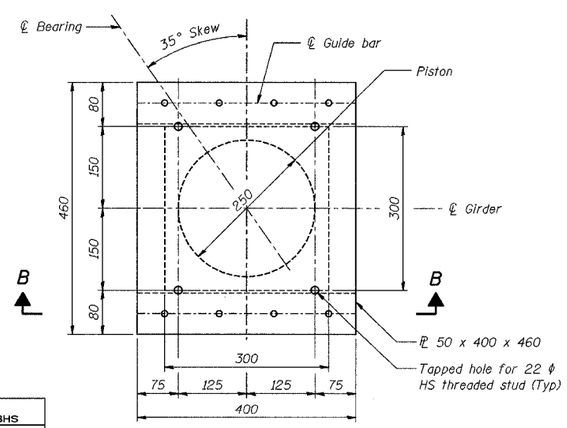

TOP BEARING ℙ AND PISTON PLAN

Max expansion length = 30 m
Total dead load + live load without impact = 1157 kN
Lateral load = 231 kN
Rotation capacity = 0.025 radians

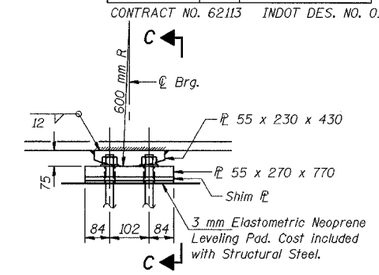

ELEVATION AT PIER

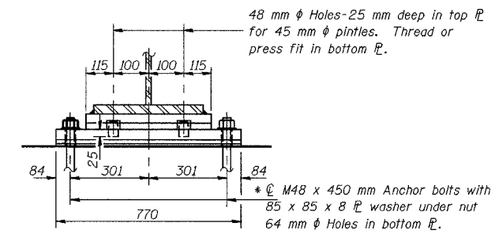

SECTION C-C

FIXED BEARING AT PIER 2

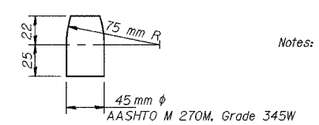

PINTLE

Notes: Anchor bolts at fixed bearings may be built into the masonry.
See Sheet S-47 for Anchor Bolt Installation.
All dimensions are in millimeters (mm) except as noted.

BILL OF MATERIAL

	Item	Unit	Total
*	Furnishing Floating Bearings, Guided Expansion, 1250 kN	Each	28

DESIGNED	BHS
CHECKED	KFA
DRAWN	MJB
CHECKED	GSP

*** FURNISHING BEARINGS AND ANCHOR BOLTS FOR BEARINGS ERECTED IN PHASE 3 ARE NOT INCLUDED IN THIS CONTRACT**

ILLINOIS DEPARTMENT OF TRANSPORTATION
F.A.I. ROUTE 80/94 (BORMAN EXPRESSWAY)
OVER LITTLE CALUMET RIVER & N.I.C.T.D. R.O.W.

BEARING DETAILS (1 OF 5)
SECTION 2626.2-R-1
LAKE COUNTY, INDIANA
STATION 8+470.000
STRUCTURE NO. I-80-1-8460 (EB & WB)
DATE 07/04 **(016-1003 & 016-1004)**

AMERICAN CONSULTING ENGINEERS