ROUTE NO.	SECTION	COUNTY	TOTAL SHEETS	SHEET NO.
F.A.I. 80/94	2626.2-R-2	LAKE COUNTY, INDIANA	452	273
		ILLINOIS FED. AID PROJECT-		

SHEET NO. S-41
72 SHEETS

CONTRACT NO. 62113 INDOT DES. NO. 0100987

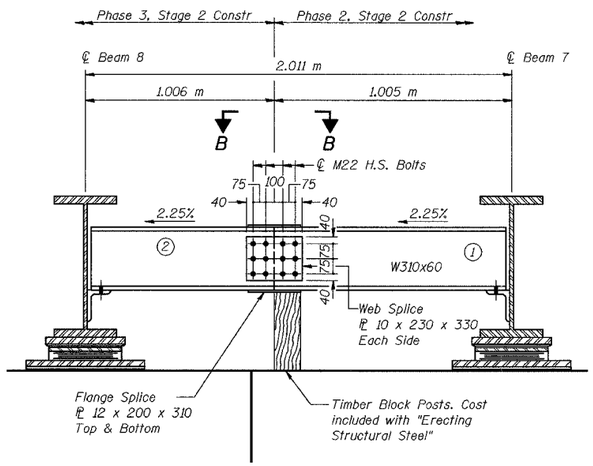

DIAPHRAGM D2

(Looking East)
2 Required
For details of connections to Beams see Diaphragm D6
(All dimensions are along skew)

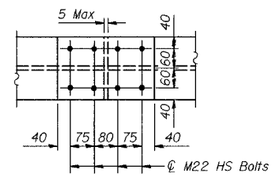

SECTION B-B

DIAPHRAGM D2 CONSTRUCTION SEQUENCE

1) Order Diaphragm D2 in two sections with lengths of 1.006 m and 1.005 m
2) Attach section ① of diaphragm to Beam 7 and top flange splice PL during Phase 2, Stage 2 Construction.
3) Place Timber Block Post between section ① of diaphragm and bearing seat.
4) Attach section ② of diaphragm to both Beam 8 and section ① of diaphragm during Phase 3, Stage 2 Construction.
5) Attach web splice plates to sections ① and ② of diaphragm.
6) Remove Timber Block Post.
7) Attach bottom flange splice plate to sections ① and ② of diaphragm.

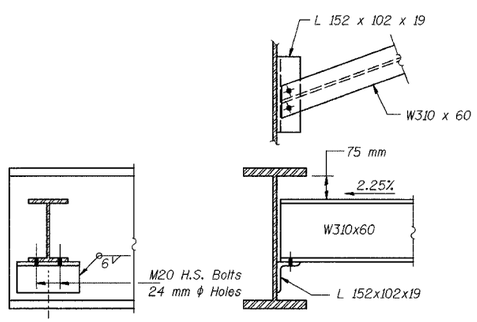

DIAPHRAGM D1

50 Required

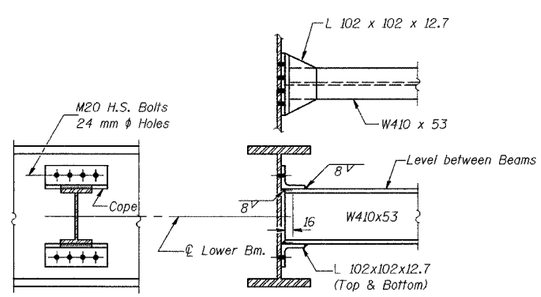

DIAPHRAGM D

338 Required

Note: Two hardened washers shall be required over all oversize holes for diaphragms.

DESIGNED	BHS
CHECKED	KFA
DRAWN	MJB
CHECKED	GSP

NOTES:

All dimensions are in millimeters (mm) except as noted.

ILLINOIS DEPARTMENT OF TRANSPORTATION
F.A.I. ROUTE 80/94 (BORMAN EXPRESSWAY)
OVER LITTLE CALUMET RIVER & N.I.C.T.D. R.O.W.

FRAMING DETAILS – UNIT 2 (2 OF 2)
SECTION 2626.2-R-1
LAKE COUNTY, INDIANA
STATION 8+470.000
STRUCTURE NO. I-80-1-8460 (EB & WB)
(016-1003 & 016-1004)

DATE 07/04

AMERICAN CONSULTING ENGINEERS