ROUTE NO.	SECTION	COUNTY	TOTAL SHEETS	SHEET NO.
F.A.I. 80/94	2626.2-R-2	LAKE COUNTY, INDIANA	452	272
		ILLINOIS	FED. AID PROJECT-	

SHEET NO. S-40
72 SHEETS

CONTRACT NO. 62113 INDOT DES. NO. 0100987

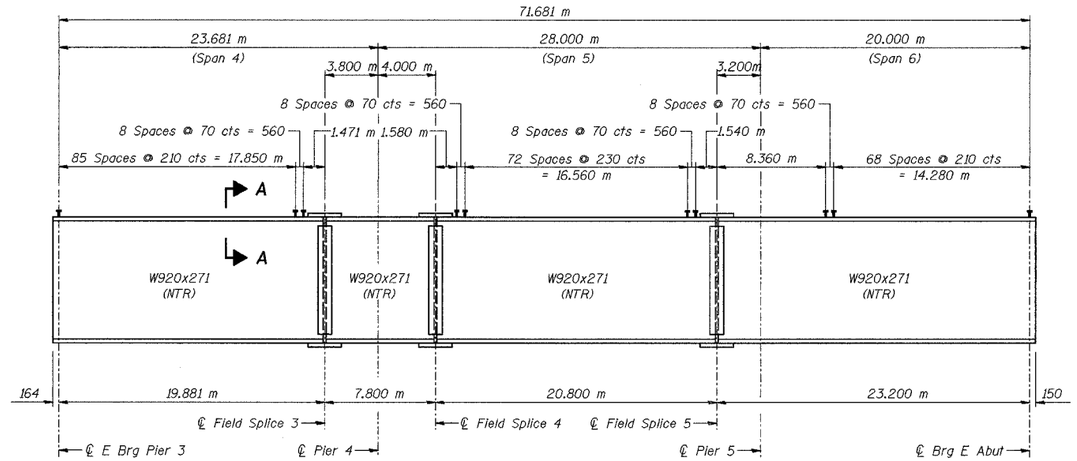

BEAM ELEVATION

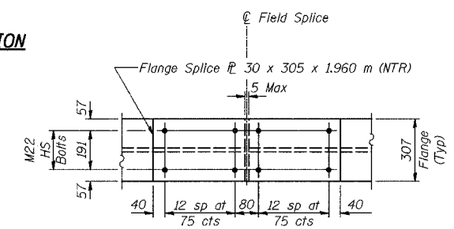

PLAN VIEW
TOP AND BOTTOM

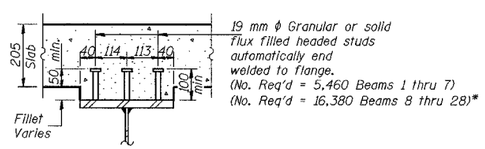

SECTION A-A

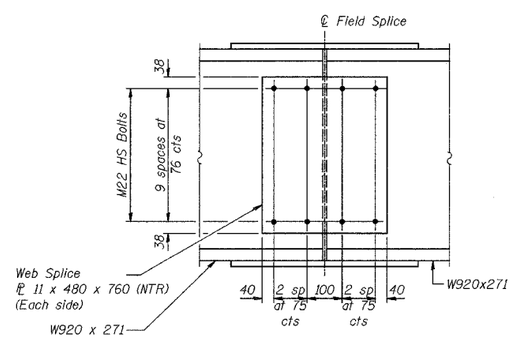

ELEVATION
FIELD SPLICE 3, 4 & 5

INTERIOR BEAM MOMENT TABLE

	0.4 Span 4	Pier 4	0.5 Span 5	Pier 5	0.6 Span 6
Is (10^6 mm^4)	4703	4703	4703	4703	4703
Ic (n) (10^6 mm^4)	9902	—	9902	—	9902
Ic (3n) (10^6 mm^4)	7291	—	7291	—	7291
Ss (10^3 mm^3)	10209	10209	10209	10209	10209
Sc (n) (10^3 mm^3)	13498	—	13498	—	13498
Sc (3n) (10^3 mm^3)	12201	—	12201	—	12201
Z (10^3 mm^3)	—	—	—	—	—
wD (kN/m)	12.92	22.57	12.92	22.57	12.92
MD (kN·m)	512	1446	446	1209	327
wsD (kN/m)	9.65	—	9.65	—	9.65
MsD (kN·m)	430	—	439	—	278
ML (kN·m)	883	503	899	487	709
M (Imp) (kN·m)	218	124	207	128	186
$\frac{5}{3}$[ML+M(Imp)] (kN·m)	1835	1045	1845	1024	1492
Ma (kN·m)	3610	3238	3549	2903	2727
Mu (kN·m)	5562	—	5562	—	5562
fsD non-comp (MPa)	50	142	44	118	32
fsD (comp) (MPa)	35	—	36	—	23
fs$\frac{5}{3}$(L+Imp) (MPa)	136	102	137	100	111
fs (Overload) (MPa)	221	244	216	219	165
fs (Total) (MPa)	—	317	—	284	—
VR (kN)	129	—	139	—	121

INTERIOR BEAM REACTION TABLE

	Pier 3	Pier 4	Pier 5	E Abut
RD (kN)	206	653	594	165
RL (kN)	182	265	260	175
Imp. (kN)	45	65	68	46
R (Total) (kN)	433	983	922	386

Is and Ss are the moment of inertia and section modulus of the steel section used in computing fs (Total & Overload).

$Ic_{(n)}$ and $Sc_{(n)}$ are the moment of inertia and section modulus of the composite section used in computing stresses due to Live Load.

$Ic_{(3n)}$ and $Sc_{(3n)}$ are the moment of inertia and section modulus of the composite section used in computing stresses due to superimposed dead loads. (see AASHTO 10.38)

VR is the maximum Live Load + Impact shear range in span.

Z is the plastic section modulus used to determine the fully plastic moments in the non-composite areas.

Ma (Applied Moment)=$1.3[MD + MsD + \frac{5}{3}(ML + M_{Imp})]$.

The Plastic Moment capacity (Mu) is computed according to AASHTO 10.48.1 and 10.50.1.1.

fs (Overload) is the sum of the stresses due to $MD + MsD + \frac{5}{3}(ML + M_{Imp})$.

fs (Total) (Non-compact section) is the sum of the stresses due to $1.3[MD + MsD + \frac{5}{3}(ML + M_{Imp})]$.

NOTES:

All structural steel on this sheet shall be AASHTO M 270M, Grade 345W.

See Sheet No. S-41 for diaphragm details.

NTR denotes notch toughness requirements.

All dimensions are in millimeters (mm) except as noted.

DESIGNED	BHS
CHECKED	KFA
DRAWN	BHS
CHECKED	GSP

*** FOR INFORMATION ONLY**

ILLINOIS DEPARTMENT OF TRANSPORTATION
F.A.I. ROUTE 80/94 (BORMAN EXPRESSWAY)
OVER LITTLE CALUMET RIVER & N.I.C.T.D. R.O.W.

FRAMING DETAILS – UNIT 2 (1 OF 2)
SECTION 2626.2-R-1
LAKE COUNTY, INDIANA
STATION 8+470.000
STRUCTURE NO. I-80-1-8460 (EB & WB)
DATE 07/04 **(016-1003 & 016-1004)**

AMERICAN CONSULTING ENGINEERS