ROUTE NO.	SECTION	COUNTY	TOTAL SHEETS	SHEET NO.
F.A.I. 80/94	2626.2-R-2	LAKE COUNTY, INDIANA	452	269
		ILLINOIS	FED. AID PROJECT-	

SHEET NO. S-37

72 SHEETS

CONTRACT NO. 62113 INDOT DES. NO. 0100987

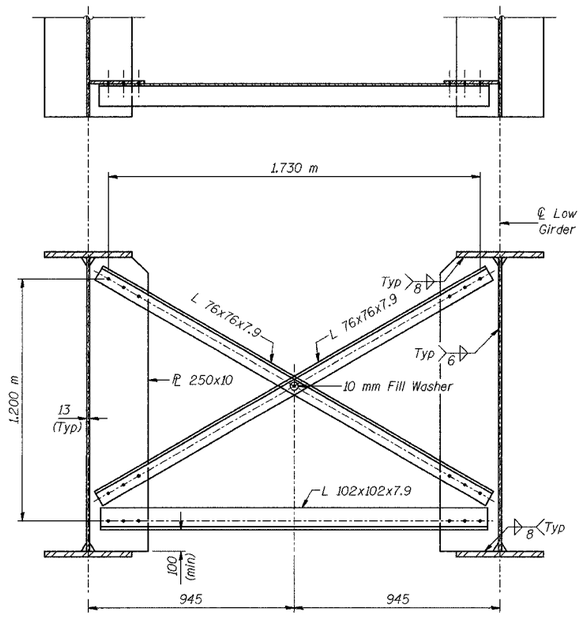

INTERIOR CROSS FRAME CF

439 Required

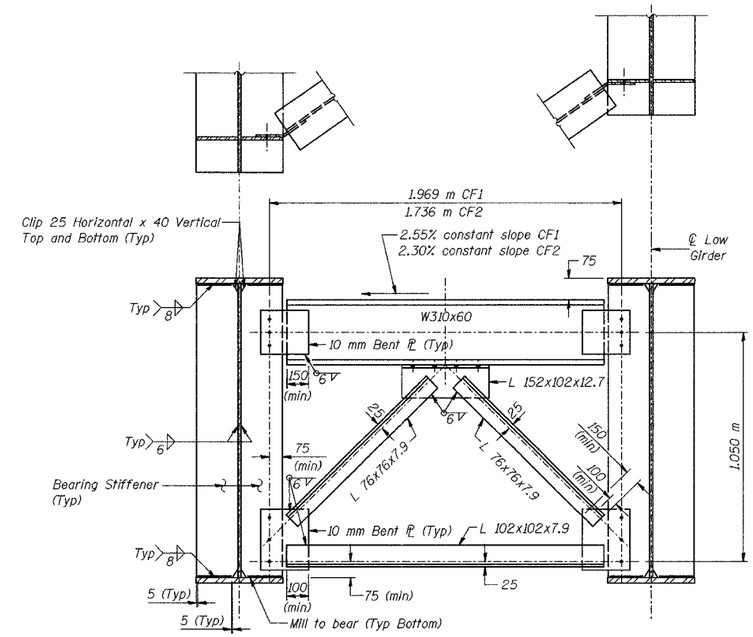

END CROSS FRAME CF1 OR CF2

CF1 - 25 Required
CF2 - 25 Required

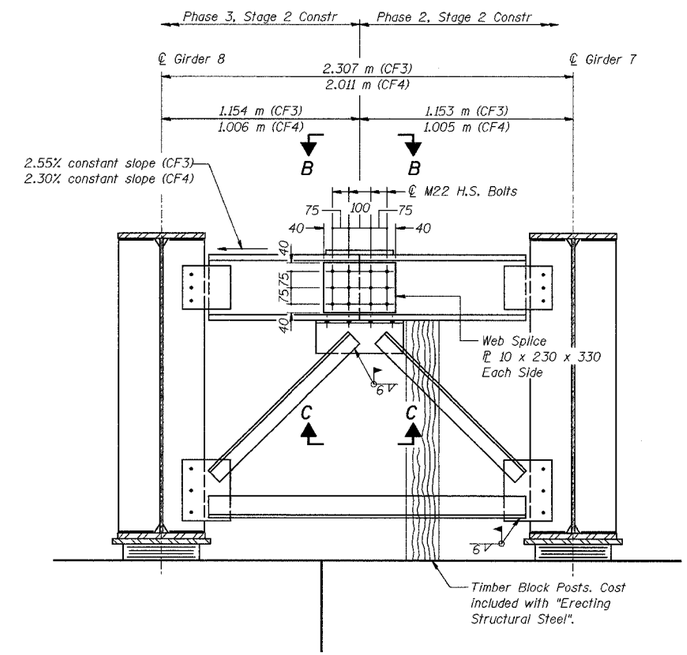

END CROSS FRAME CF3 OR CF4

(Looking East)
CF3-1 Required, CF4-1 Required

CROSS FRAME CF3 AND CF4 CONSTRUCTION SEQUENCE

1) Order Cross Frame CF3 and CF4 in three components as shown.
2) Attach component ① to the bearing stiffener on Girder 7 and top flange splice ℙ to component ① during Phase 2, Stage 2 Construction.
3) Place Timber Block Post between component ① and bearing seat.
4) Attach component ③ to the bearing stiffener on Girder 8 and attach component ② to components ① and ③ during Phase 3, Stage 2 Construction.
5) Attach web splice plates to components ① and ③.
6) Remove Timber Block Post.

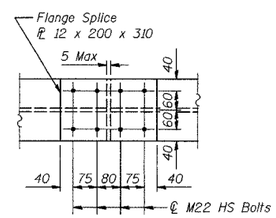

SECTION B-B

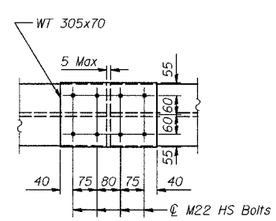

SECTION C-C

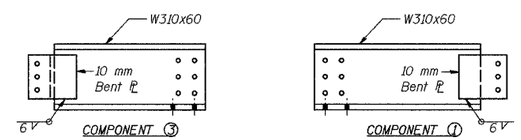

COMPONENT ③

COMPONENT ①

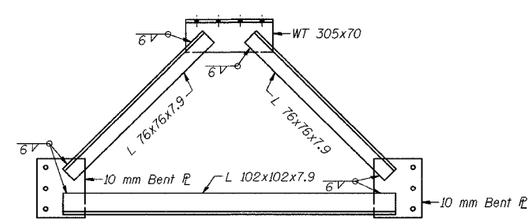

COMPONENT ②

END CROSS FRAME CF3 OR CF4 COMPONENTS

NOTES:

All open holes shall be 28 mm ϕ for M22 HS bolts

All dimensions are in millimeters (mm) except as noted.

DESIGNED	BHS
CHECKED	KFA
DRAWN	MJB
CHECKED	GSP

ILLINOIS DEPARTMENT OF TRANSPORTATION
F.A.I. ROUTE 80/94 (BORMAN EXPRESSWAY)
OVER LITTLE CALUMET RIVER & N.I.C.T.D. R.O.W.

FRAMING DETAILS – UNIT 1 (3 OF 3)
SECTION 2626.2-R-1
LAKE COUNTY, INDIANA
STATION 8+470.000
STRUCTURE NO. I-80-1-8460 (EB & WB)

DATE 07/04 (016-I003 & 016-I004)

AMERICAN CONSULTING ENGINEERS