ROUTE NO.	SECTION	COUNTY	TOTAL SHEETS	SHEET NO.
F.A.I. 80/94	2626.2-R-2	LAKE COUNTY, INDIANA	452	268
		ILLINOIS	FED. AID PROJECT-	

SHEET NO. S-36
72 SHEETS

CONTRACT NO. 62113 INDOT DES. NO. 0100987

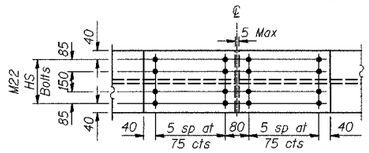

PLAN VIEW

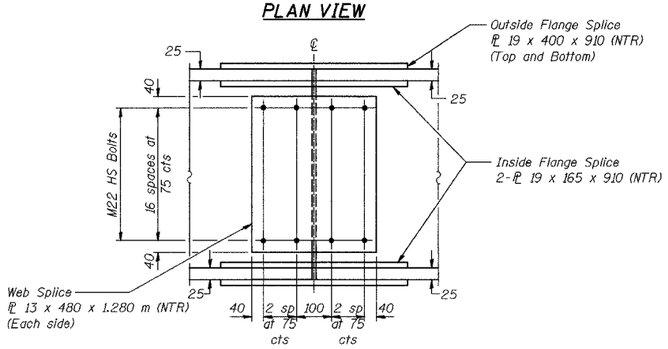

ELEVATION
FIELD SPLICE 1
(Girders 1 thru 28)

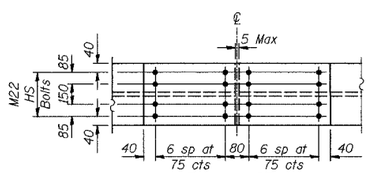

PLAN VIEW

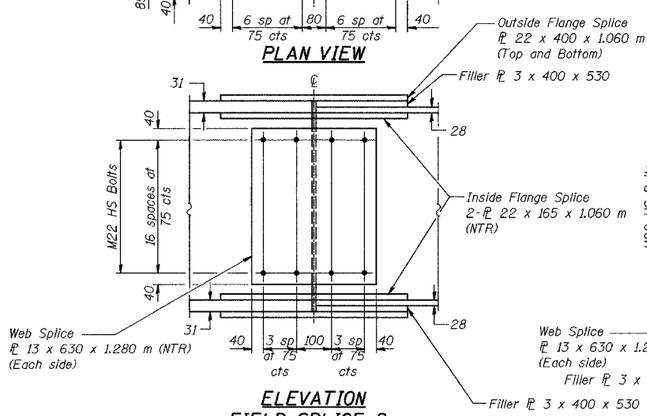

ELEVATION
FIELD SPLICE 2
(Girders 1 thru 14)

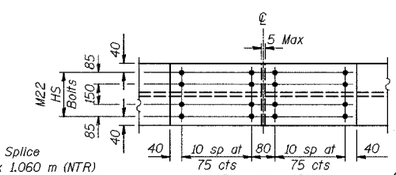

PLAN VIEW

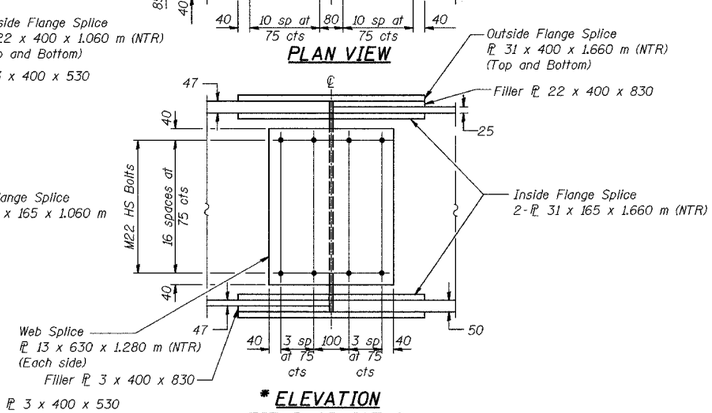

* ELEVATION
FIELD SPLICE 2
(Girders 15 thru 28)

* INTERIOR GIRDER MOMENT TABLE - WESTBOUND

	0.4 Span 1	Pier 1	0.5 Span 2	Pier 2	0.6 Span 3
Is (10^6 mm^4)	12058	12058	12714	21612	16058
Ic (n) (10^6 mm^4)	23114	—	24351	—	33545
Ic (3n) (10^6 mm^4)	17479	—	18272	—	24171
Ss (10^3 mm^3)	17226	17226	18163	29934	27983
Sc (n) (10^3 mm^3)	21448	—	23055	—	34605
Sc (3n) (10^3 mm^3)	19737	—	20990	—	31905
Z (10^3 mm^3)	—	—	—	—	—
wD (kN/m)	13.37	23.02	13.75	24.96	14.25
MD (kN·m)	932	2358	704	4579	2025
sD (kN/m)	9.65	—	9.65	—	9.65
MsD (kN·m)	713	—	668	—	1518
ML (kN·m)	1189	776	1249	1246	1917
M (Imp) (kN·m)	266	164	250	241	359
$5/3$[ML+M(Imp)] (kN·m)	2426	1566	2498	2479	3794
Ma (kN·m)	5292	5101	5031	9174	9539
Mu (kN·m)	6765	—	5603	—	10851
fsD non-comp (MPa)	54	137	39	153	72
fsD (comp) (MPa)	36	—	32	—	48
fs $5/3$(L+Imp) (MPa)	113	91	108	83	110
fs (Overload) (MPa)	203	228	179	236	230
fs (Total) (MPa)	—	296	—	306	—
VR (kN)	167	—	189	—	200

INTERIOR GIRDER MOMENT TABLE - EASTBOUND

	0.4 Span 1	Pier 1	0.5 Span 2	Pier 2	0.6 Span 3
Is (10^6 mm^4)	12058	12058	12058	14430	13239
Ic (n) (10^6 mm^4)	23114	—	23114	—	24713
Ic (3n) (10^6 mm^4)	17479	—	17479	—	18781
Ss (10^3 mm^3)	17226	17226	17226	20439	18832
Sc (n) (10^3 mm^3)	21448	—	21448	—	23099
Sc (3n) (10^3 mm^3)	19737	—	19737	—	21328
Z (10^3 mm^3)	—	—	—	—	—
wD (kN/m)	13.37	23.02	13.37	24.44	13.58
MD (kN·m)	852	2573	870	3058	1172
sD (kN/m)	9.65	—	9.65	—	9.65
MsD (kN·m)	672	—	792	—	910
ML (kN·m)	1186	792	1270	933	1383
M (Imp) (kN·m)	265	167	254	191	291
$5/3$[ML+M(Imp)] (kN·m)	2418	1598	2540	1874	2790
Ma (kN·m)	5125	5423	5463	6412	6335
Mu (kN·m)	6605	—	7086	—	7107
fsD non-comp (MPa)	49	149	51	150	62
fsD (comp) (MPa)	34	—	40	—	43
fs $5/3$(L+Imp) (MPa)	113	93	118	92	121
fs (Overload) (MPa)	196	242	209	241	226
fs (Total) (MPa)	—	315	—	314	—
VR (kN)	186	—	189	—	185

INT GIRDER RXN TABLE - WESTBOUND

	W Abut	Pier 1	Pier 2	Pier 3
RD (kN)	275	839	1157	412
RL (kN)	192	284	320	225
Imp. (kN)	43	60	62	42
R (Total) (kN)	510	1183	1539	679

INT GIRDER RXN TABLE - EASTBOUND

	W Abut	Pier 1	Pier 2	Pier 3
RD (kN)	265	873	948	311
RL (kN)	192	284	289	206
Imp. (kN)	43	60	59	43
R (Total) (kN)	500	1217	1296	560

Is and Ss are the moment of inertia and section modulus of the steel section used in computing fs (Total & Overload).

$Ic_{(n)}$ and $Sc_{(n)}$ are the moment of inertia and section modulus of the composite section used in computing stresses due to Live Load.

$Ic_{(3n)}$ and $Sc_{(3n)}$ are the moment of inertia and section modulus of the composite section used in computing stresses due to superimposed dead loads. (see AASHTO 10.38)

VR is the maximum Live Load + Impact shear range in span.

Z is the plastic section modulus used to determine the fully plastic moments in the non-composite areas.

Ma (Applied Moment) = $1.3[M_D + M_{sD} + \frac{5}{3}(M_L + M_{imp})]$.

The Plastic Moment capacity (Mu) is computed according to AASHTO 10.48.1 and 10.50.1.1.

fs (Overload) is the sum of the stresses due to $M_D + M_{sD} + \frac{5}{3}(M_L + M_{imp})$.

fs (Total) (Non-compact section) is the sum of the stresses due to $1.3[M_D + M_{sD} + \frac{5}{3}(M_L + M_{imp})]$.

DESIGNED	BHS
CHECKED	KFA
DRAWN	MJB
CHECKED	GSP

NOTES:

NTR denotes notch toughness requirements.

All dimensions are in millimeters (mm) except as noted.

All splice plate material shall be AASHTO M 270M, Grade 345W.

*** FOR INFORMATION ONLY**

ILLINOIS DEPARTMENT OF TRANSPORTATION
F.A.I. ROUTE 80/94 (BORMAN EXPRESSWAY)
OVER LITTLE CALUMET RIVER & N.I.C.T.D. R.O.W.

FRAMING DETAILS – UNIT 1 (2 OF 3)
SECTION 2626.2-R-1
LAKE COUNTY, INDIANA
STATION 8+470.000
STRUCTURE NO. I-80-1-8460 (EB & WB)
DATE 07/04 (016-I003 & 016-I004)

AMERICAN CONSULTING ENGINEERS