| ROUTE NO. | SECTION | COUNTY | TOTAL SHEETS | SHEET NO. |
|---|---|---|---|---|
| F.A.I. 80/94 | 2626.2-R-2 | LAKE COUNTY, INDIANA | 452 | 264 |
| | | ILLINOIS FED. AID PROJECT- | | |

SHEET NO. S-32
72 SHEETS

CONTRACT NO. 62113 INDOT DES. NO. 0100987

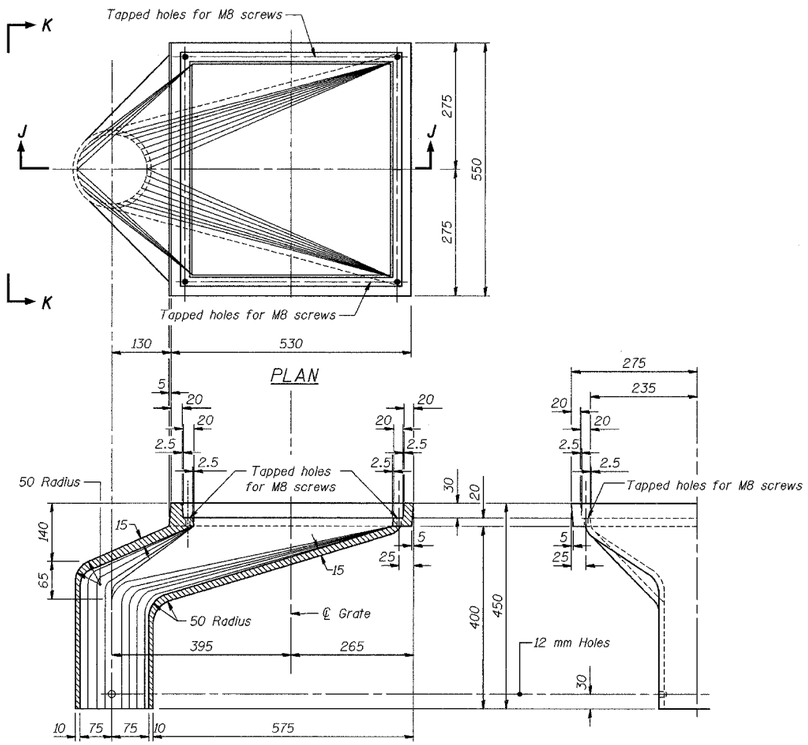


ROADWAY DRAIN TYPE OS

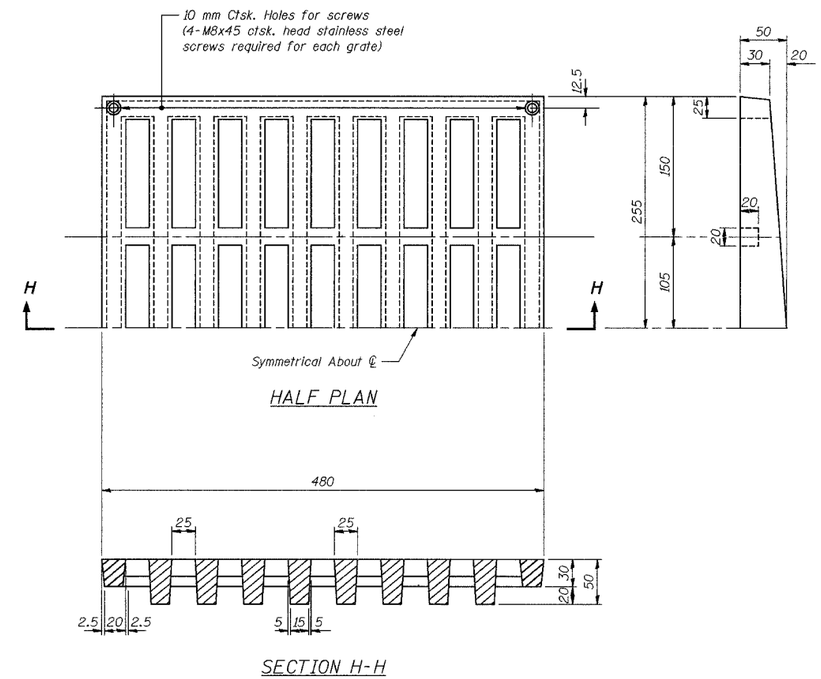


GRATE D

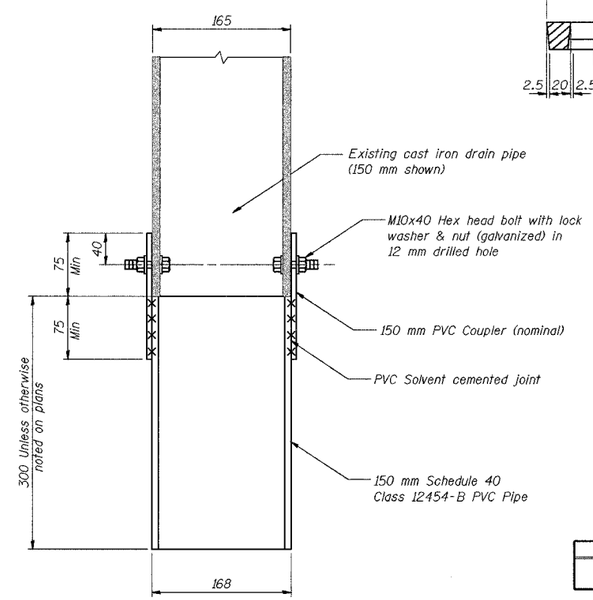


CAST IRON DRAIN EXTENSION

## GENERAL NOTES

1. For attaching pipe to all drains, use M10x40 hex bolts with 2-M10 lock washers and 2-M10 nuts. (All parts galvanized)
2. The approximate weight of the drain is 109.8 kg.
3. Fit grate to box in shop and ship in place.
4. This grate is used with Roadway Drain Type OS and weighs approximately 36.3 kg.
5. Class 12454-B is an updated ASTM designation for Type I Grade 1 PVC pipe.
6. Cost of the Grate, Frame, Downspout, Bolts, Washers and Nuts including complete installation of Scupper will be paid for at the unit bid price each for Drainage Structures Type OS.

## BILL OF MATERIAL

| Item | Unit | Total |
|---|---|---|
| | | |

| | |
|---|---|
| DESIGNED | BHS |
| CHECKED | KFA |
| DRAWN | MJB |
| CHECKED | GSP |

**FOR INFORMATION ONLY**

ILLINOIS DEPARTMENT OF TRANSPORTATION
F.A.I. ROUTE 80/94 (BORMAN EXPRESSWAY)
OVER LITTLE CALUMET RIVER & N.I.C.T.D. R.O.W.

**DRAINAGE SCUPPER DETAILS**
**SECTION 2626.2-R-1**
**LAKE COUNTY, INDIANA**
**STATION 8+470.000**
**STRUCTURE NO. I-80-1-8460 (EB & WB)**
DATE 07/04 **(016-I003 & 016-I004)**

AMERICAN CONSULTING ENGINEERS