ROUTE NO.	SECTION	COUNTY	TOTAL SHEETS	SHEET NO.
F.A.I. 80/94	2626.2-R-2	LAKE COUNTY, INDIANA	452	261
		ILLINOIS FED. AID PROJECT-		

SHEET NO. S-29
72 SHEETS

CONTRACT NO. 62113 INDOT DES. NO. 0100987

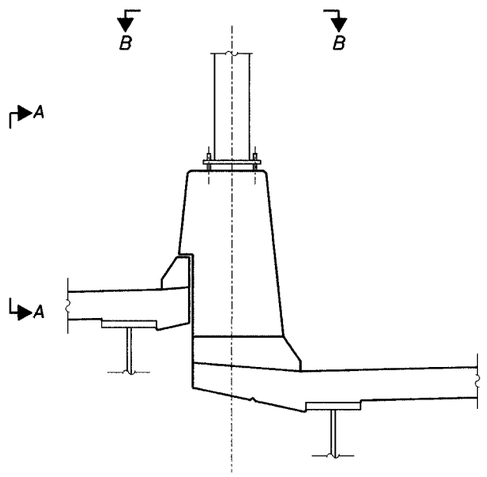

LIGHT POLE SUPPORT DETAIL

(Looking East)

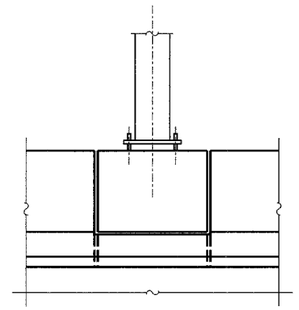

VIEW A-A

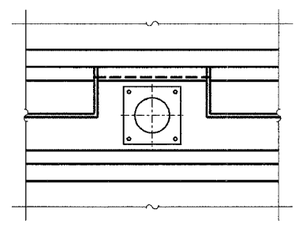

VIEW B-B

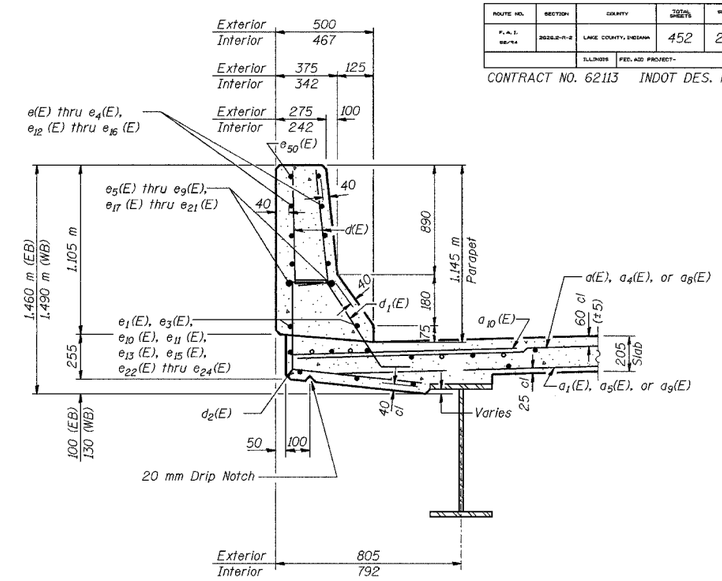

SECTION THRU PARAPETS

All concrete edges shall have a 20 mm chamfer.

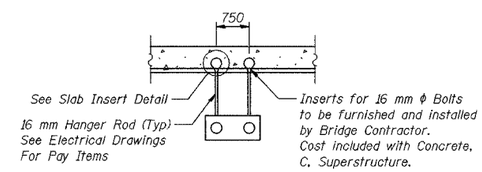

2 CONDUITS SUPPORT DETAIL

Max Spacing = 1.05 m

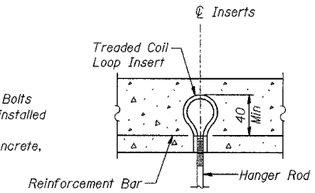

SLAB INSERT DETAIL

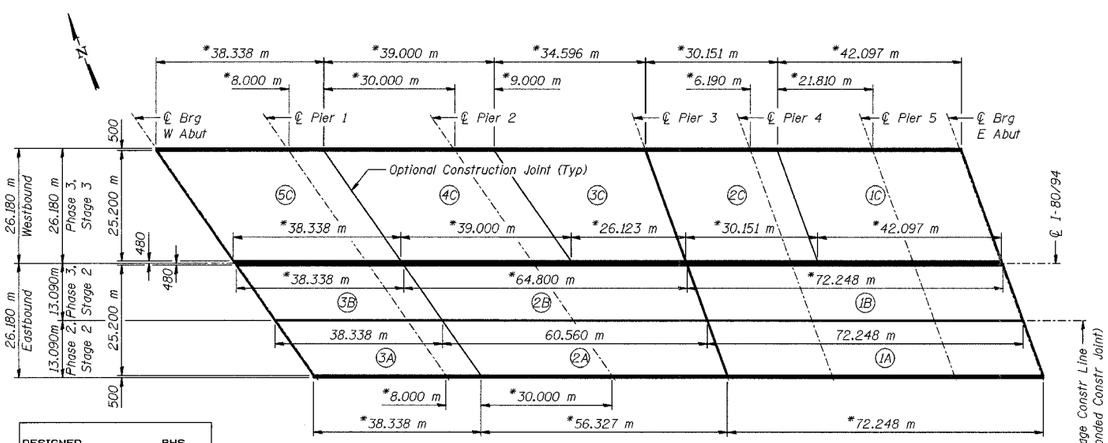

DESIGNED	BHS
CHECKED	KFA
DRAWN	MJB
CHECKED	GSP

DECK POURING SEQUENCE

* Dimensions are measured along inside face of parapet.

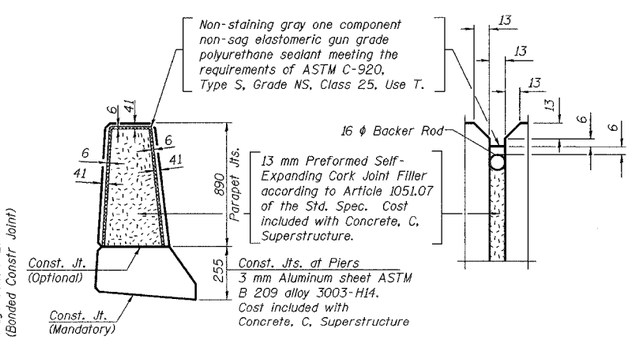

PARAPET JOINT DETAILS

LEGEND

EB - Eastbound Structure
WB - Westbound Structure

NOTES:

Reinforcement bars designated (E) shall be epoxy coated.
All dimensions are in millimeters (mm) except as noted.

PHASE 3 FOR INFORMATION ONLY

ILLINOIS DEPARTMENT OF TRANSPORTATION
F.A.I. ROUTE 80/94 (BORMAN EXPRESSWAY)
OVER LITTLE CALUMET RIVER & N.I.C.T.D. R.O.W.

SUPERSTRUCTURE DETAILS (1 OF 2)
SECTION 2626.2-R-1
LAKE COUNTY, INDIANA
STATION 8+470.000
STRUCTURE NO. I-80-1-8460 (EB & WB)
DATE 07/04 **(016-1003 & 016-1004)**

AMERICAN CONSULTING ENGINEERS