ROUTE NO.	SECTION	COUNTY	TOTAL SHEETS	SHEET NO.
F.A.I. 80/94	2626.2-R-2	LAKE COUNTY, INDIANA	452	255
		ILLINOIS FED. AID PROJECT-		

SHEET NO. S-23
72 SHEETS

CONTRACT NO. 62113 INDOT DES. NO. 0100987

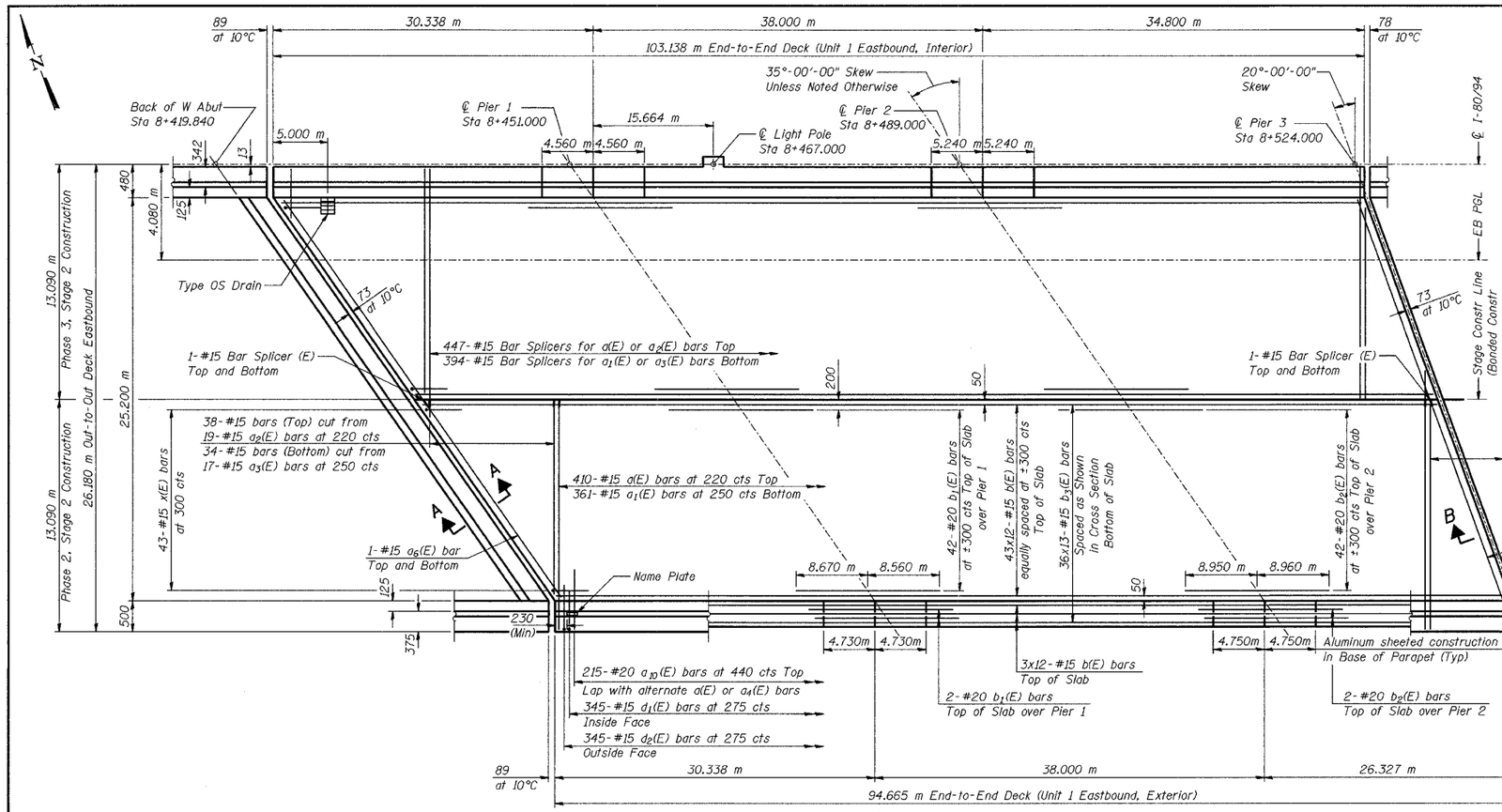

PLAN

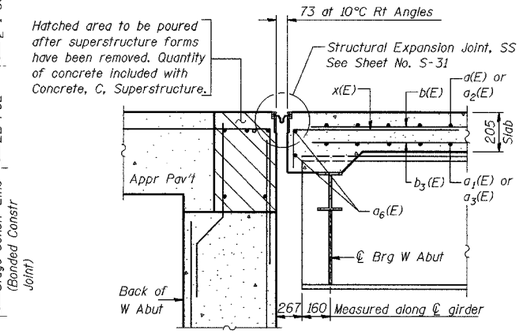

SECTION A-A

NOTES:

See Sheet No. S-25 for Section B-B.

See Sheet No. S-27 for parapet reinforcement.

See Sheet No. S-29 for parapet details.

See Sheet No. S-30 for superstructure details, field cutting diagrams, and Bill of Material.

Reinforcement bars designated (E) shall be epoxy coated.

Bars indicated thus 20 x 3-#15 etc. indicates 20 lines of bars with 3 lengths per line.

Apply Surface Seal to entire top surface of the bridge deck and parapets and the inside vertical faces of the parapets.

All dimensions are in millimeters (mm) except as noted.

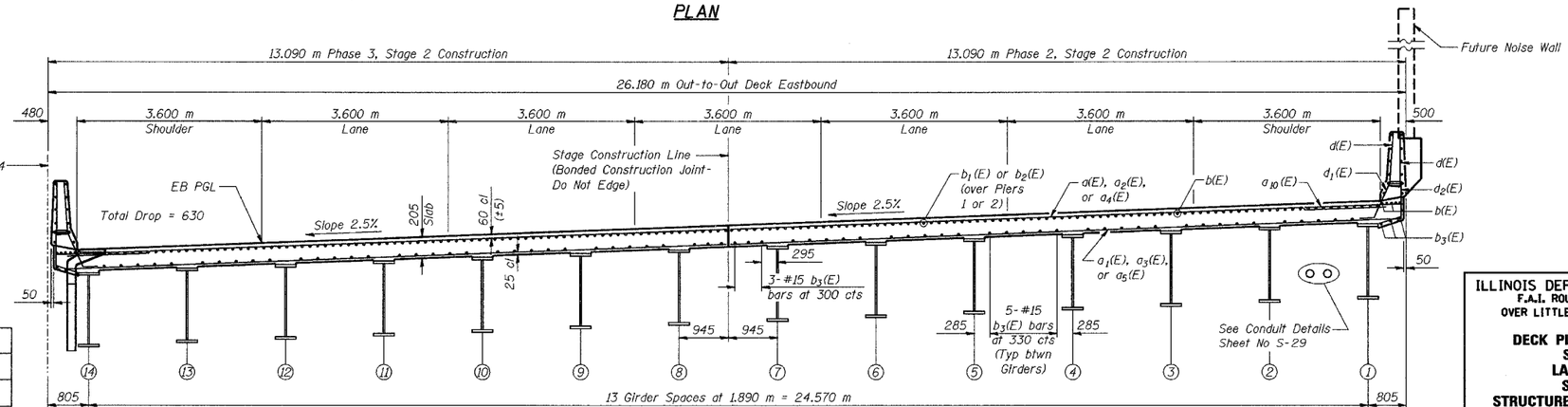

CROSS SECTION
(Looking East)

PHASE 3 FOR INFORMATION ONLY

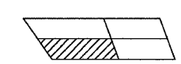

KEY PLAN

MINIMUM BAR LAPS
#15 = 640

DESIGNED	BHS
CHECKED	KFA
DRAWN	MJB
CHECKED	GSP

ILLINOIS DEPARTMENT OF TRANSPORTATION
F.A.I. ROUTE 80/94 (BORMAN EXPRESSWAY)
OVER LITTLE CALUMET RIVER & N.I.C.T.D. R.O.W.

DECK PLAN – UNIT 1 EASTBOUND
SECTION 2626.2–R–1
LAKE COUNTY, INDIANA
STATION 8+470.000
STRUCTURE NO. I–80–1–8460 (EB & WB)
DATE 07/04 **(016–I003 & 016–I004)**

AMERICAN CONSULTING ENGINEERS