ROUTE NO.	SECTION	COUNTY	TOTAL SHEETS	SHEET NO.
F.A.I. 80/94	2626-2-R-2	LAKE COUNTY, INDIANA	452	239
		ILLINOIS FED. AID PROJECT-		

SHEET NO. S-7
72 SHEETS

CONTRACT NO. 62113 INDOT DES. NO. 0100987

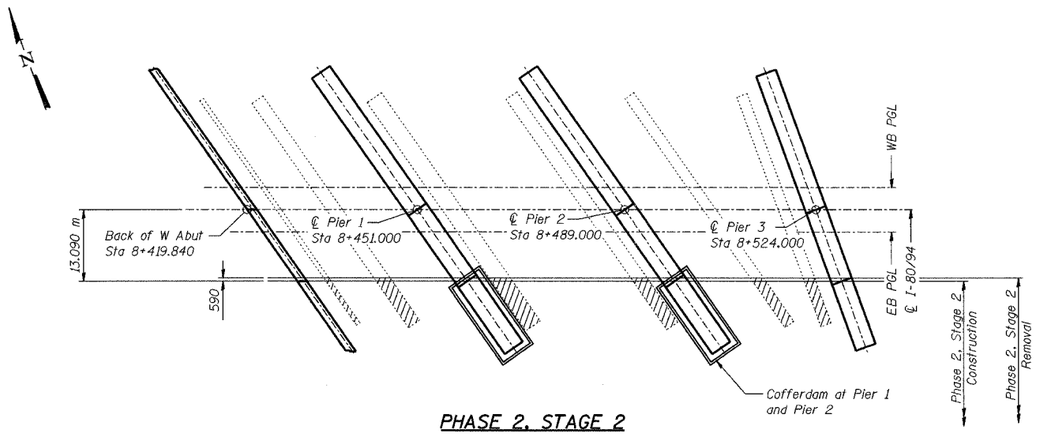

PHASE 2, STAGE 2

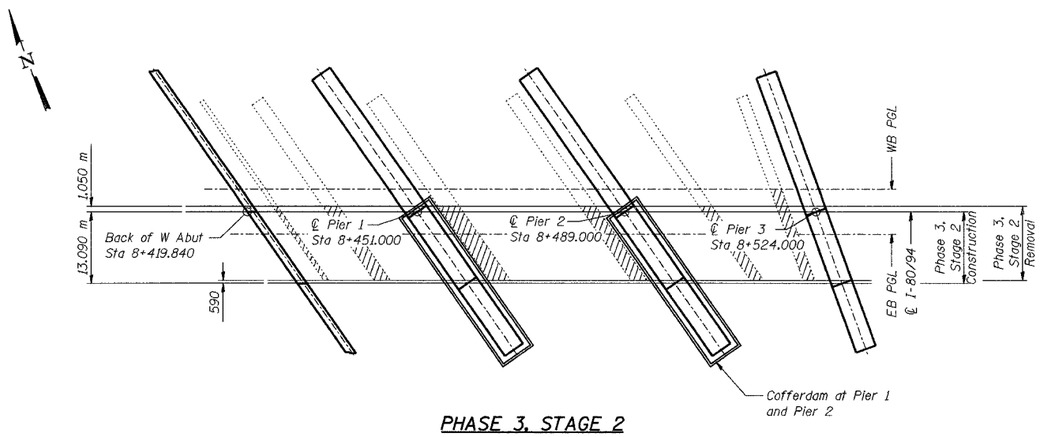

PHASE 3, STAGE 2

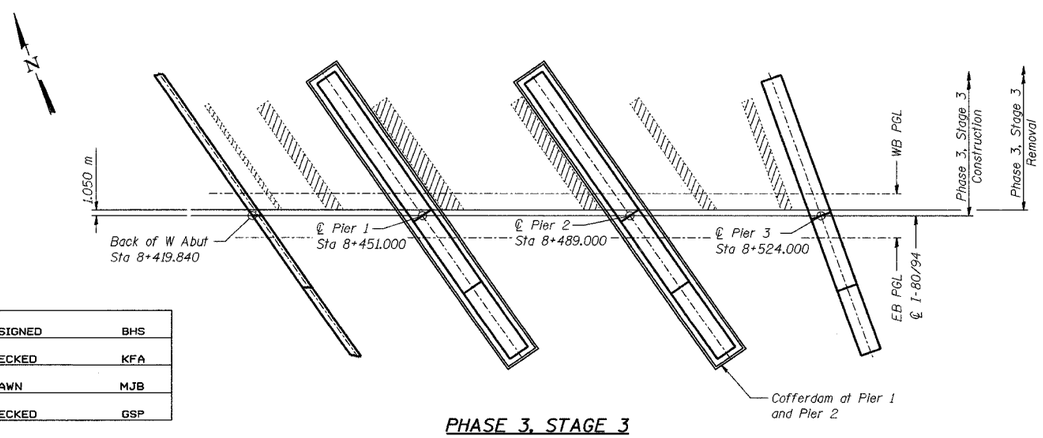

PHASE 3, STAGE 3

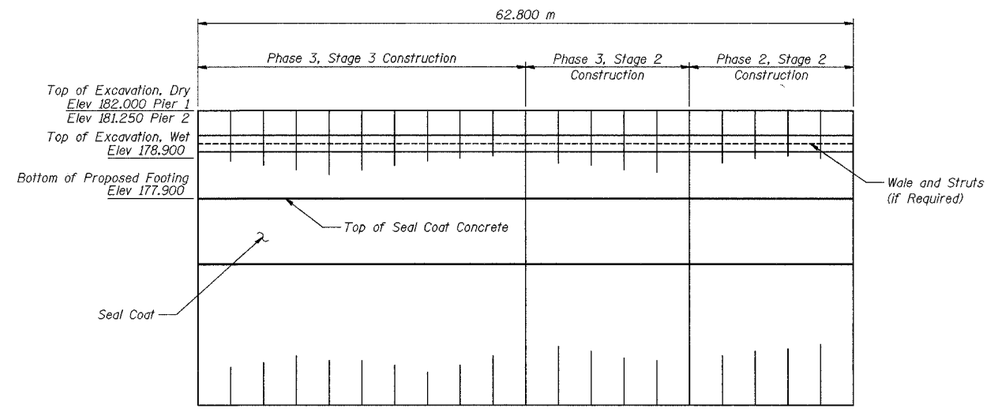

COFFERDAM ELEVATION
(Looking East)

NOTES:

The information shown for the Cofferdams is estimated. It is the Contractor's responsibility to provide a design and computations of the Cofferdams, Cofferdam bracing, and all associated members, if required, subject to the approval of the Engineer.

All dimensions are in millimeters (mm) except as noted.

DESIGNED	BHS
CHECKED	KFA
DRAWN	MJB
CHECKED	GSP

PHASE 3 FOR INFORMATION ONLY

ILLINOIS DEPARTMENT OF TRANSPORTATION
F.A.I. ROUTE 80/94 (BORMAN EXPRESSWAY)
OVER LITTLE CALUMET RIVER & N.I.C.T.D. R.O.W.

COFFERDAMS FOR PIER CONSTRUCTION
SECTION 2626.2-R-1
LAKE COUNTY, INDIANA
STATION 8+470.000
STRUCTURE NO. I-80-1-8460 (EB & WB)

DATE 07/04 **(016-1003 & 016-1004)**

AMERICAN CONSULTING ENGINEERS