ROUTE NO.	SECTION	COUNTY	TOTAL SHEETS	SHEET NO.
F.A.I. 80/94	2626.2-R-R-2	LAKE COUNTY, INDIANA	452	237
		ILLINOIS FED. AID PROJECT-		

SHEET NO. S-5
72 SHEETS

CONTRACT NO. 62113 INDOT DES. NO. 0100987

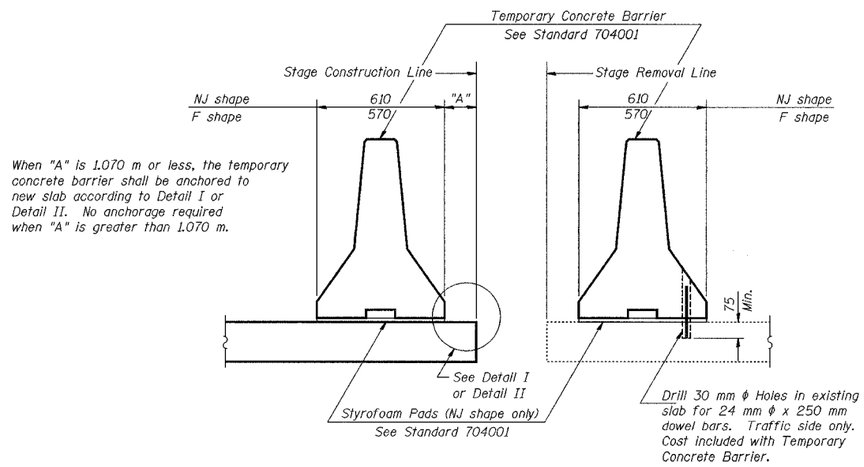

NEW SLAB EXISTING SLAB

SECTIONS THRU SLAB

NOTES

Detail I - With Bar Splicer or Couplers:
Connect one (1) 25x180x250 steel ℙ to the top layer of couplers with 2-16 mm ϕ bolts screwed to coupler at approximate ℄ of each barrier panel.

Detail II - With Extended Reinforcement Bars:
Connect one (1) 25x180x250 steel ℙ to the concrete slab with 2-16 mm ϕ Expansion Anchors or cast in place inserts spaced between the top layer of reinforcement at approximate ℄ of each barrier panel.

Cost of anchorage is included with Temporary Concrete Barrier.

All dimensions are in millimeters (mm) except as noted.

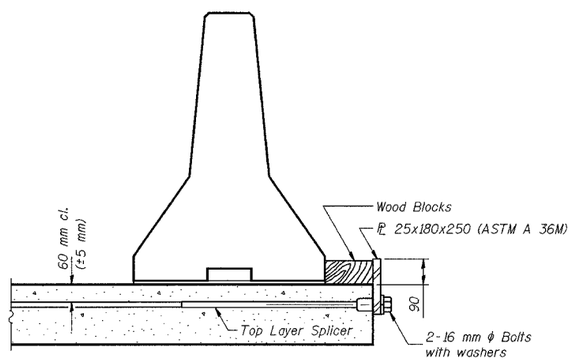

DETAIL I

The 25x180x250 Plate shall not be removed until Stage II Construction forms and reinforcement bars are in place.

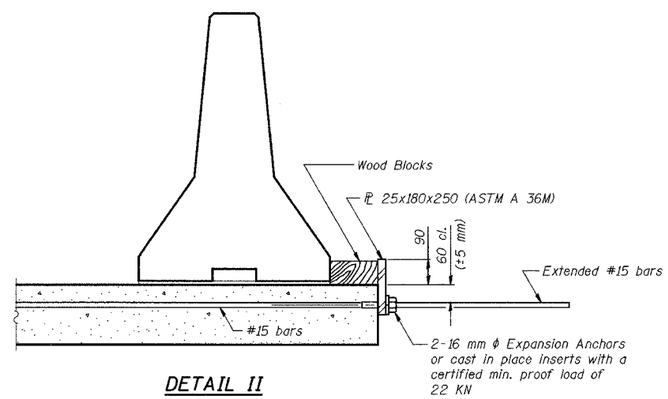

DETAIL II

The 25x180x250 Plate shall not be removed until Stage II Construction forms and all reinforcement bars are in place and the concrete is ready to be placed.

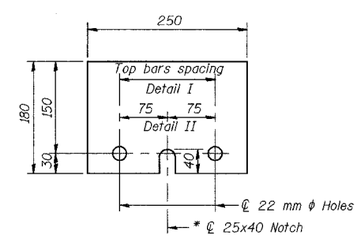

ℙ 25x180x250

* Required only with Detail II

DESIGNED	BHS
CHECKED	KFA
DRAWN	MJB
CHECKED	GSP

R-27 (M)

ILLINOIS DEPARTMENT OF TRANSPORTATION
F.A.I. ROUTE 80/94 (BORMAN EXPRESSWAY)
OVER LITTLE CALUMET RIVER & N.I.C.T.D. R.O.W.
TEMPORARY CONCRETE BARRIER FOR STAGE CONSTRUCTION
SECTION 2626.2-R-1
LAKE COUNTY, INDIANA
STATION 8+470.000
STRUCTURE NO. I-80-1-8460 (EB & WB)
(016-I003 & 016-I004)
DATE 07/04

AMERICAN CONSULTING ENGINEERS