ROUTE NO.	SECTION	COUNTY	TOTAL SHEETS	SHEET NO.
F.A.I. 80/94	2626.2-R-2	LAKE COUNTY, INDIANA	452	233
		ILLINOIS FED. AID PROJECT-		

SHEET NO. S-1
72 SHEETS

CONTRACT NO. 62113 INDOT DES. NO. 0100987

BENCHMARK:
TBM 213: Chiseled box on Northeast corner of outside parapet on Eastbound I-80 over Little Calumet River Bridge. Station 8+603.3, Offset 22.3 Rt. Elevation = 191.392.

EXISTING STRUCTURE:
S.N. I-80-1-2122 originally built in 1949 as State Road 420-AA9 over the Little Calumet River and the Monon Railroad by the State Highway Commission of Indiana. The structure was widened in 1966, 1982, 1990 and 1996. The existing structure is an eleven span, dual-structure bridge, 164.306 m average length back to back of abutments, with a reinforced concrete deck superstructure varying from 43.045 m to 44.604 m, supported by continuous wide flange steel beams on multi-column concrete piers and open abutments with varying skew angles.

SALVAGE:
None.

NOTE:
All dimensions millimeters (mm) except as noted.

(***) NOTE: The dimensions shown are the Maximum and Minimum beam lengths (℄ to ℄) within the structure.

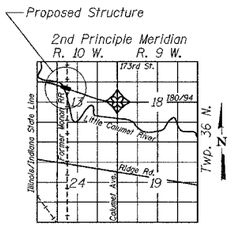

LOCATION SKETCH

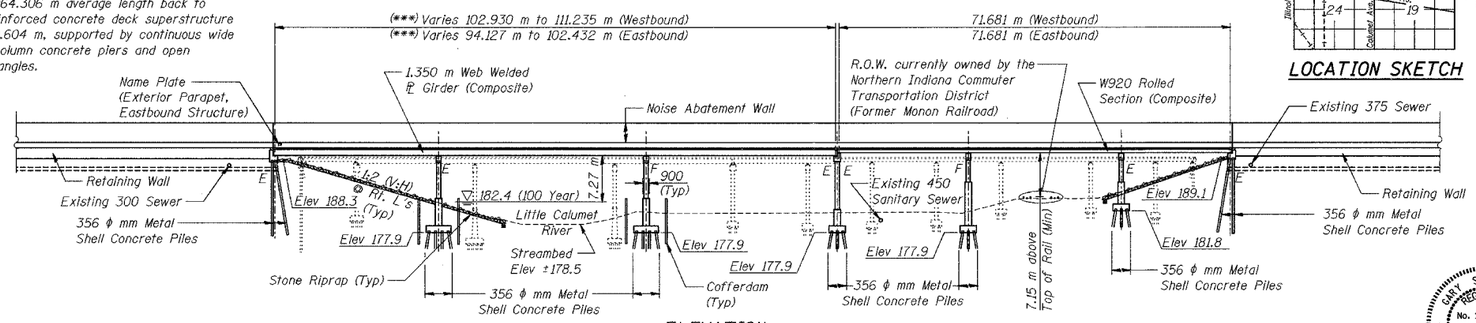

ELEVATION
(Looking North)

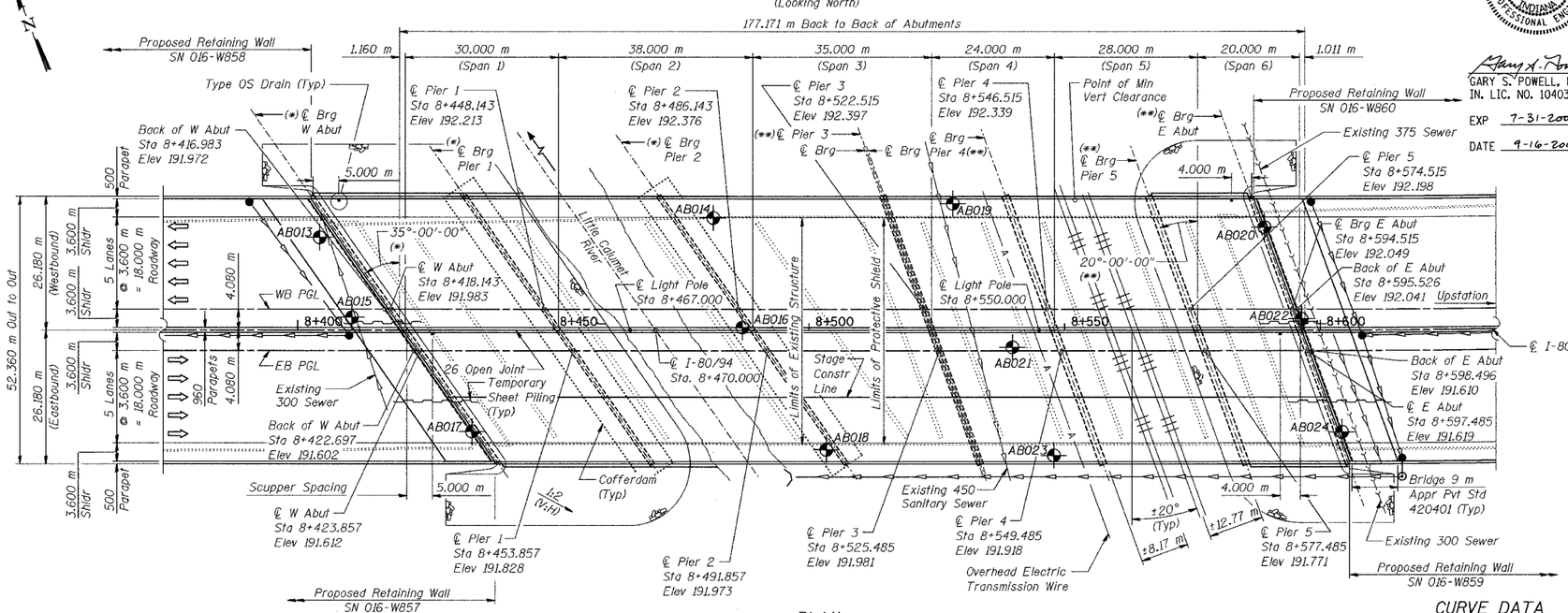

PLAN

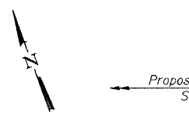

DESIGNED	BHS
CHECKED	KFA
DRAWN	BHS
CHECKED	GSP

LEGEND

E.B. - Eastbound Traffic
W.B. - Westbound Traffic
- Proposed Sewer
- Temporary Sheet Piling
- Soil Boring
- Drainage Structure

(*) Skew angle 35°-00'-00" for West Abutment, Pier 1, and Pier 2.

(**) Skew angle 20°-00'-00" for Pier 3, Pier 4, Pier 5, and East Abutment.

APPROVED
FOR STRUCTURAL ADEQUACY ONLY
Ralph E. Anderson
ENGINEER OF BRIDGES AND STRUCTURES

NOTES: Constant superelevation of 2.5% across the structure, as shown in the Cross Section on Sheet 2.

No deck drains will be permitted in Span 5 over Railroad ROW.

CURVE DATA
Δ = 20°-51'-41"
T = 343.250 m
L = 678.899 m
E = 31.331 m
R = 1,864.600 m
S.E. = 3.0%
P.C. = Sta 8+603.684
P.T. = Sta 9+282.583
P.I. = Sta 8+946.934

DESIGN SPECIFICATIONS
2002 AASHTO Standard Specifications for Highway Bridges.
1989 AASHTO Guide Specifications for Structural Design of Sound Barriers and 1992 Interims.

DESIGN LOADING
Roadway Live Load: MS-18, Alt. Military, and Indiana Toll Road Truck Loads
Future Wearing Surface: 2.4 kN/sq m
Wind Load on Noise Wall = 1.7 kPa

DESIGN STRESSES
Class "A" Concrete: f'c = 24 MPa
Reinforcement: fy = 400 MPa
Structural Steel: fy = 345 MPa (M 270M grade 345W)

SEISMIC DATA
Seismic Performance Category (SPC): A
Bedrock Acceleration Coefficient (A): 0.04g
Site Coefficient (S): 1.0

GARY S. POWELL REGISTERED No. 10403944 STATE OF INDIANA PROFESSIONAL ENGINEER

LICENSED STRUCTURAL ENGINEER GARY S. POWELL 081-004771 CHICAGO ILLINOIS STATE OF ILLINOIS

GARY S. POWELL, P. E.
IN. LIC. NO. 10403944
EXP 7-31-2006
DATE 9-16-2004

GARY S. POWELL, S.E.
IL. LIC. NO. 081-004771
EXP 11-30-2004
DATE 9-16-2004

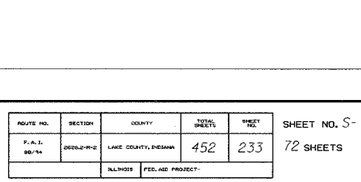

PROFILE GRADE I-80/94 W.B.

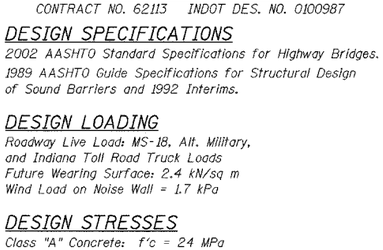

PROFILE GRADE I-80/94 E.B.

ILLINOIS DEPARTMENT OF TRANSPORTATION
F.A.I. ROUTE 80/94 (BORMAN EXPRESSWAY)
OVER LITTLE CALUMET RIVER & N.I.C.T.D. R.O.W.

GENERAL PLAN
SECTION 2626.2-R-1
LAKE COUNTY, INDIANA
STATION 8+470.000
STRUCTURE NO. I-80-1-8460 (EB & WB)
(016-I003 & 016-I004)

DATE 07/04

AMERICAN CONSULTING ENGINEERS