ROUTE NO.	SECTION	COUNTY	TOTAL SHEETS	SHEET NO.
F.A.I. 80/94	2626.2-R-1	LAKE COUNTY, INDIANA	452	226
		ILLINOIS	FED. AID PROJECT-	

SHEET NO. S-11
17 SHEETS

CONTRACT NO. 62113 INDOT DES. NO. 0100987

Notes: Driving and bearing ends of pipe shall be cut square. The thickness of the shell shall be 6.35 mm with a tolerance of 5 %. The shell shall be according to Article 1006.05(a) of the Standard Specifications.

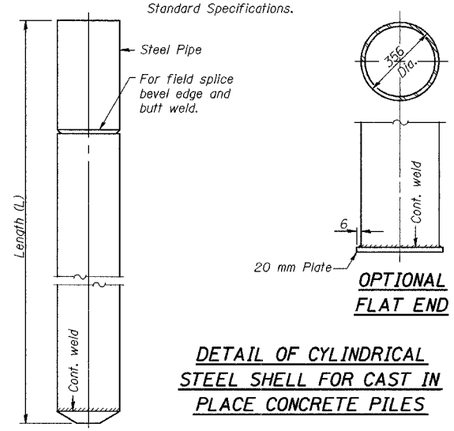

DETAIL OF CYLINDRICAL STEEL SHELL FOR CAST IN PLACE CONCRETE PILES

DESIGNED	MJW
CHECKED	KFA
DRAWN	MJB
CHECKED	GSP

X-PB (M) 4-30-97 (All dimensions are in millimeters (mm) except as noted.)

ILLINOIS DEPARTMENT OF TRANSPORTATION
I-80/94/US 6
KINGERY-BORMAN EXPRESSWAY
BURNHAM ROAD TO US 41

CONCRETE PILE DETAILS
SECTION 2626.2-R-1
LAKE COUNTY, INDIANA
STATION 8+600.619 TO STATION 8+735.576
STRUCTURE NO. 016-W859

DATE 07/04

AMERICAN CONSULTING ENGINEERS