ROUTE NO.	SECTION	COUNTY	TOTAL SHEETS	SHEET NO.
F.A.I. 80/94	2626.2-R-1	LAKE COUNTY, INDIANA	452	224
		ILLINOIS	FED. AID PROJECT-	

SHEET NO. S-9
17 SHEETS

CONTRACT NO. 62113 INDOT DES. NO. 0100987

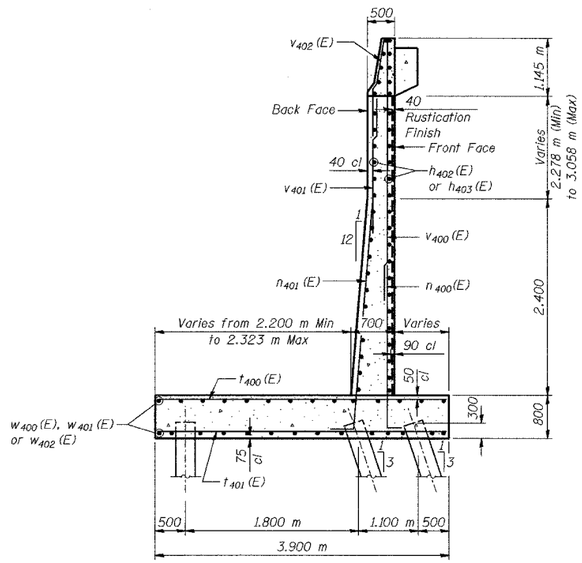

SECTION A-A

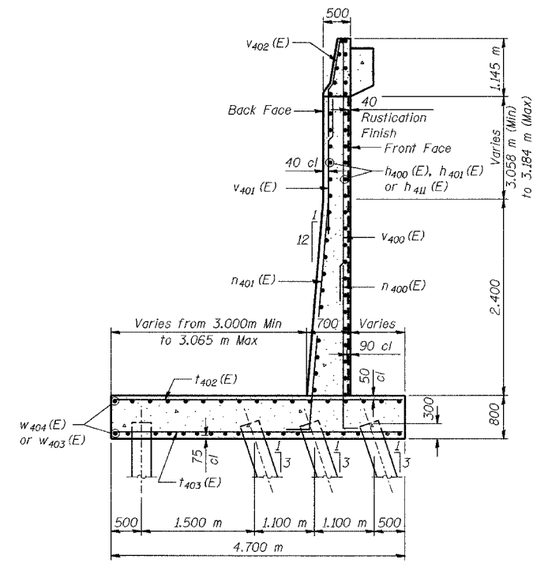

SECTION B-B

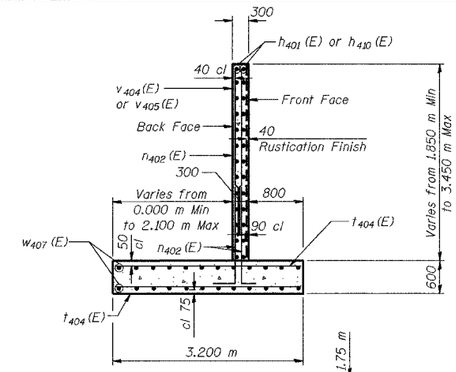

SECTION C-C

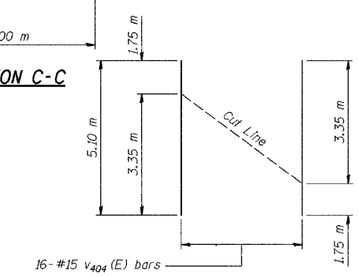

** FIELD CUTTING DIAGRAM

Order bars full length. Cut to fit as shown. Use remainder of bars in opposite face.

BILL OF MATERIAL

Bar	No.	Size	Length (m)	Shape
h_{400} (E)	174	#15	5.30	
h_{401} (E)	26	#15	5.00	
h_{402} (E)	409	#15	7.84	
h_{403} (E)	274	#15	7.10	
h_{404} (E)	28	#15	2.30	
h_{405} (E)	11	#15	1.10	
h_{406} (E)	9	#15	7.90	
h_{407} (E)	47	#15	7.04	
h_{408} (E)	2	#15	2.15	
h_{409} (E)	1	#15	1.90	
h_{410} (E)	2	#15	3.58	
h_{411} (E)	78	#20	7.90	
h_{412} (E)	144	#20	2.86	
h_{413} (E)	4	#20	2.74	
n_{400} (E)	452	#15	3.46	
n_{401} (E)	666	#25	3.60	
n_{402} (E)	46	#15	2.59	
t_{400} (E)	461	#25	3.80	
t_{401} (E)	541	#20	3.80	
t_{402} (E)	86	#25	4.60	
t_{403} (E)	56	#20	4.60	
t_{404} (E)	44	#20	3.10	
v_{400} (E)	457	#15	3.71	
v_{401} (E)	677	#20	3.86	
v_{402} (E)	677	#20	1.99	
v_{403} (E)	16	#15	3.35	
v_{404} (E)	16	#15	5.10	
v_{405} (E)	11	#20	5.04	
v_{406} (E)	222	#20	2.47	
w_{400} (E)	196	#15	8.76	
w_{401} (E)	140	#15	9.29	
w_{402} (E)	56	#15	7.85	
w_{403} (E)	34	#15	5.90	
w_{404} (E)	68	#15	4.98	
w_{405} (E)	28	#15	2.52	
w_{406} (E)	28	#15	3.06	
w_{407} (E)	48	#15	2.82	
Test Pile, 356 mm		Each		3
Excavation, Foundation, Unclassified		m^3		1.801
Concrete, A, Substructure		m^3		849.1
Reinforcing Bars, Epoxy Coated		kg		59,570
Surface Seal (Estimated)		m^2		207
Pile, Concrete, Steel Shell Encased, 6.35 mm, 356 mm		m		2,834.0
Geocomposite Wall Drain		m^2		620
Pipe, Underdrain, Perf, 1.63 mm, 150 mm		m		145.0
Noise Abatement Wall Anchor Rod Assembly		Each		37

PILE DATA

Type - 356 ϕ Metal Shell
Capacity - 500 kN
Est. Length - 13.0 m
No. Reqd. - 218
Test Piles - 3

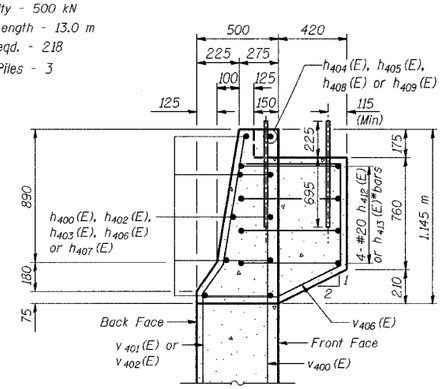

SECTION THRU PARAPET

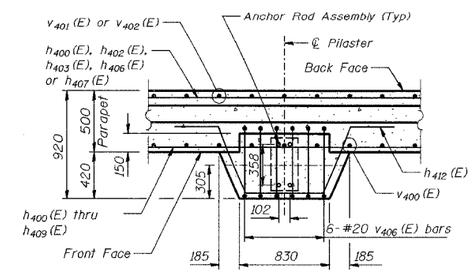

PILASTER SUPPORT - PLAN VIEW
(37 Locations)

* h_{413} (E) bars to be placed in pilaster at Start Wall Sta 8+605.691

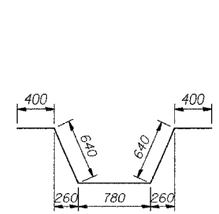

BAR h_{412} (E)

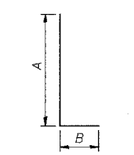

BARS n_{400} (E) and n_{402} (E)

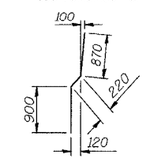

BARS v_{402} (E)

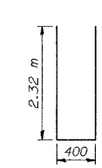

BARS v_{405} (E)

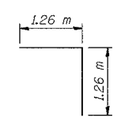

BARS w_{405} (E)

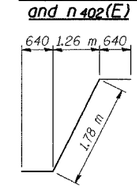

BARS w_{406} (E)

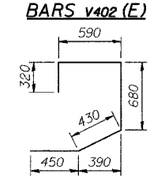

BAR v_{406} (E)

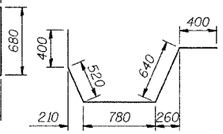

BAR h_{413} (E)

BAR DIMENSIONS

Bar	A	B
n_{400} (E)	3.20 m	260
n_{401} (E)	3.20 m	400
n_{402} (E)	2.33 m	260

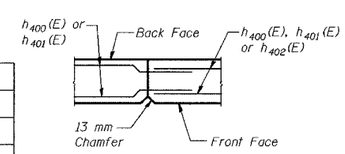

CONSTRUCTION JOINT DETAIL

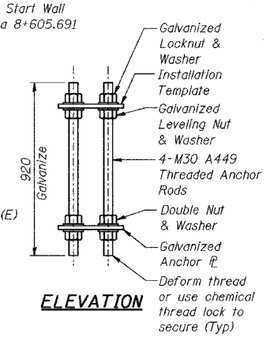

ELEVATION

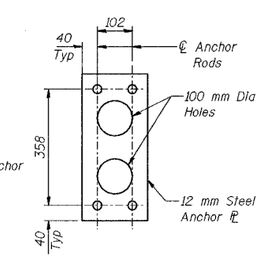

PLAN

NOISE ABATEMENT WALL ANCHOR ROD ASSEMBLY
(37 Req'd)

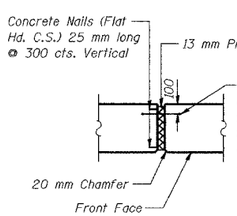

13 MM EXPANSION JOINT DETAIL

NOTES:

See Sheet S-10 for Rustication details.

Reinforcement bars designated (E) shall be epoxy coated.

All dimensions are in millimeters (mm) except as noted.

See Typical Section on Sheet S-2 for Drainage Details and Surface Seal Limits.

DESIGNED	MJW
CHECKED	KFA
DRAWN	MJB
CHECKED	GSP

ILLINOIS DEPARTMENT OF TRANSPORTATION
I-80/94/US 6
KINGERY-BORMAN EXPRESSWAY
BURNHAM ROAD TO US 41

WALL SECTIONS AND DETAILS
SECTION 2626.2-R-1
LAKE COUNTY, INDIANA
STATION 8+600.619 TO STATION 8+735.576
STRUCTURE NO. 016-W859

DATE 07/04

AMERICAN CONSULTING ENGINEERS