ROUTE NO.	SECTION	COUNTY	TOTAL SHEETS	SHEET NO.
F.A.I. 80/94	2626.2-R-1	LAKE COUNTY, INDIANA	452	206
		ILLINOIS FED. AID PROJECT-		

SHEET NO. S-11
20 SHEETS

CONTRACT NO. 62113 INDOT DES. NO. 0100987

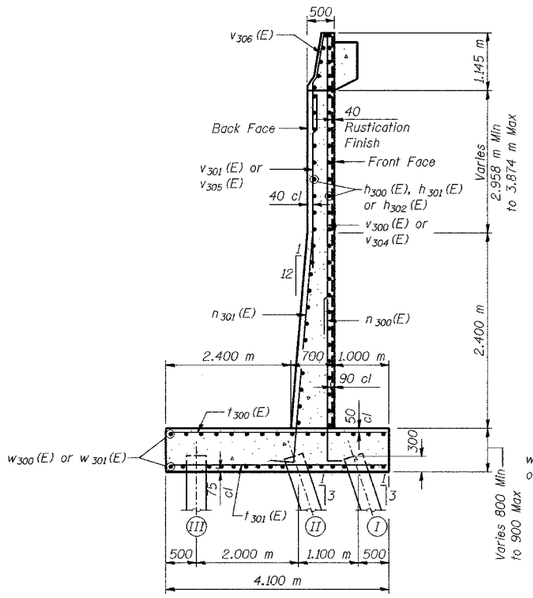

SECTION A-A

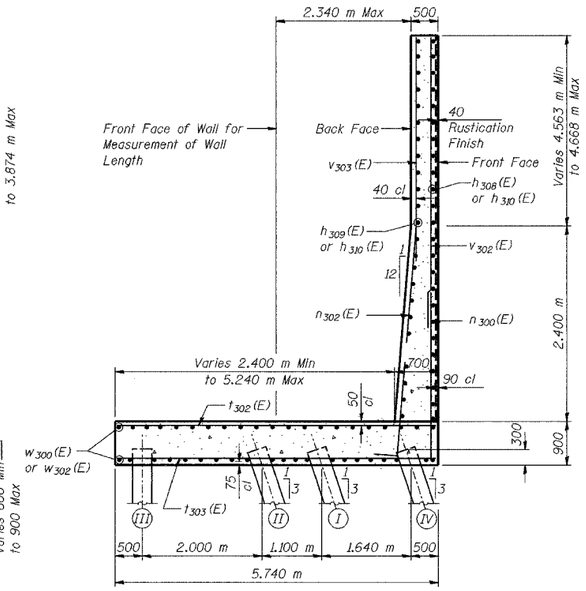

SECTION B-B

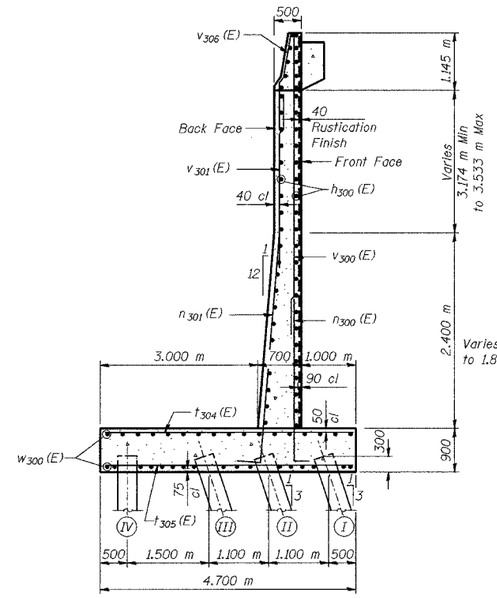

SECTION C-C

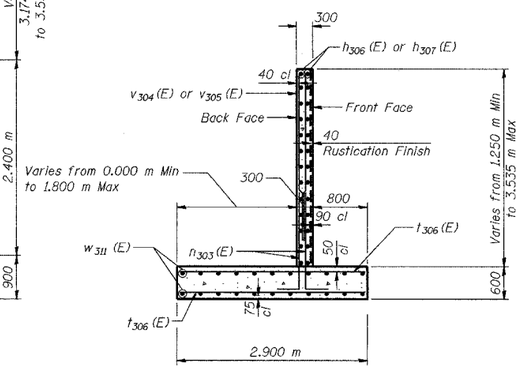

SECTION D-D

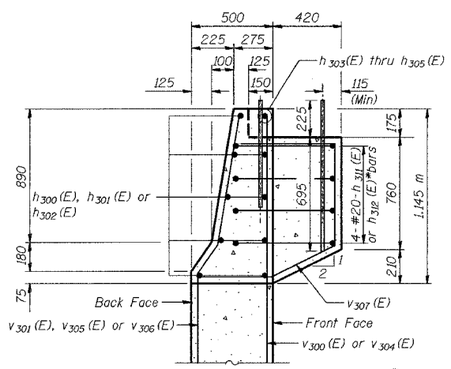

SECTION THRU PARAPET

* h_{312} (E) bars to be placed in pilaster at Sta 8+438.554

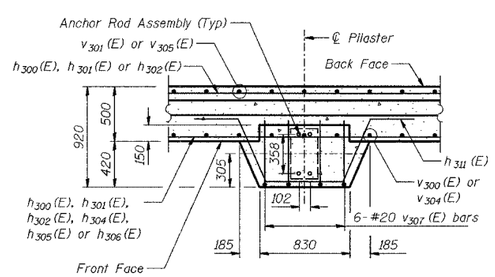

PILASTER SUPPORT - PLAN VIEW

(46 Locations)

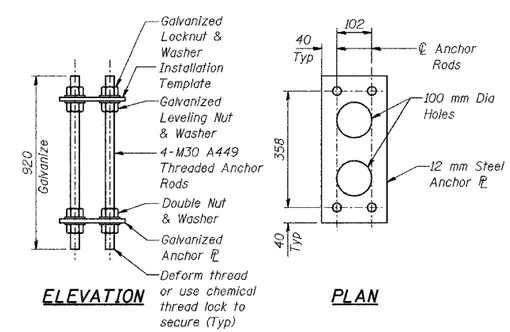

ELEVATION PLAN

NOISE ABATEMENT WALL ANCHOR ROD ASSEMBLY

(52 Req'd)

PILE DATA

Type - 356 ϕ Metal Shell
Capacity - 500 kN
Est. Length - 16.0 m
No. Reqd. - 361
Test Piles - 4

NOTES:

See Sheet S-12 for Expansion Joint details and Bill of Material

See Sheet S-13 for Rustication details.

Reinforcement bars designated (E) shall be epoxy coated.

All dimensions are in millimeters (mm) except as noted.

See Typical Section on Sheet S-2 for Drainage Details and Surface Seal Limits..

DESIGNED	MJW
CHECKED	KFA
DRAWN	MJB
CHECKED	GSP

ILLINOIS DEPARTMENT OF TRANSPORTATION
I-80/94/US 6
KINGERY-BORMAN EXPRESSWAY
BURNHAM ROAD TO US 41

WALL SECTIONS AND DETAILS
SECTION 2626.2-R-1
LAKE COUNTY, INDIANA
STATION 8+268.572 TO STATION 8+445.954
STRUCTURE NO. 016-W857

DATE 07/04

AMERICAN CONSULTING ENGINEERS