ROUTE NO.	SECTION	COUNTY	TOTAL SHEETS	SHEET NO.
F.A.I. 80/94	2626.2-R-1	LAKE COUNTY, INDIANA	452	200
		ILLINOIS FED. AID PROJECT-		

SHEET NO. S-5
20 SHEETS

CONTRACT NO. 62113 INDOT DES. NO. 0100987

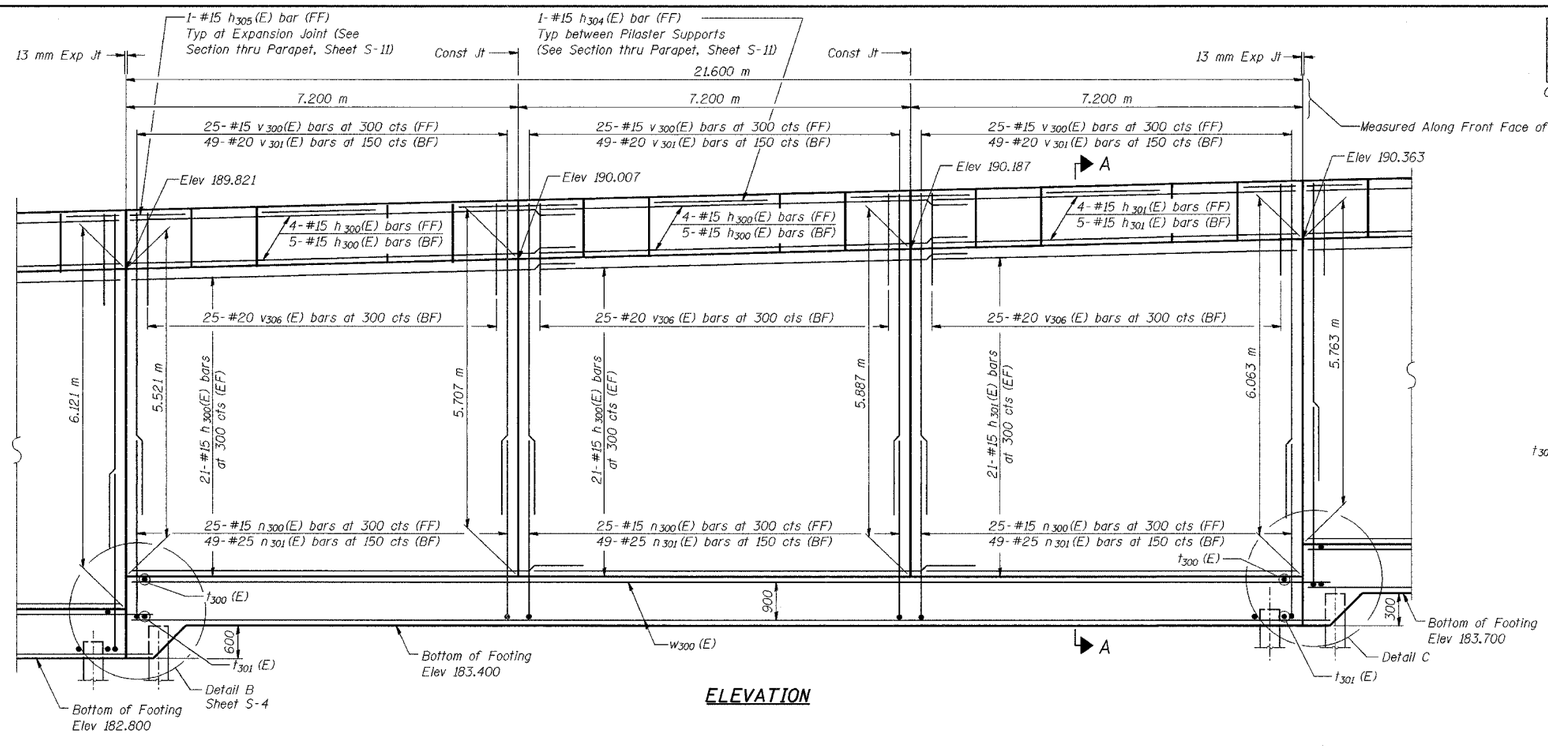

ELEVATION

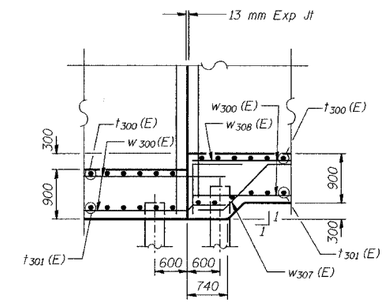

DETAIL C

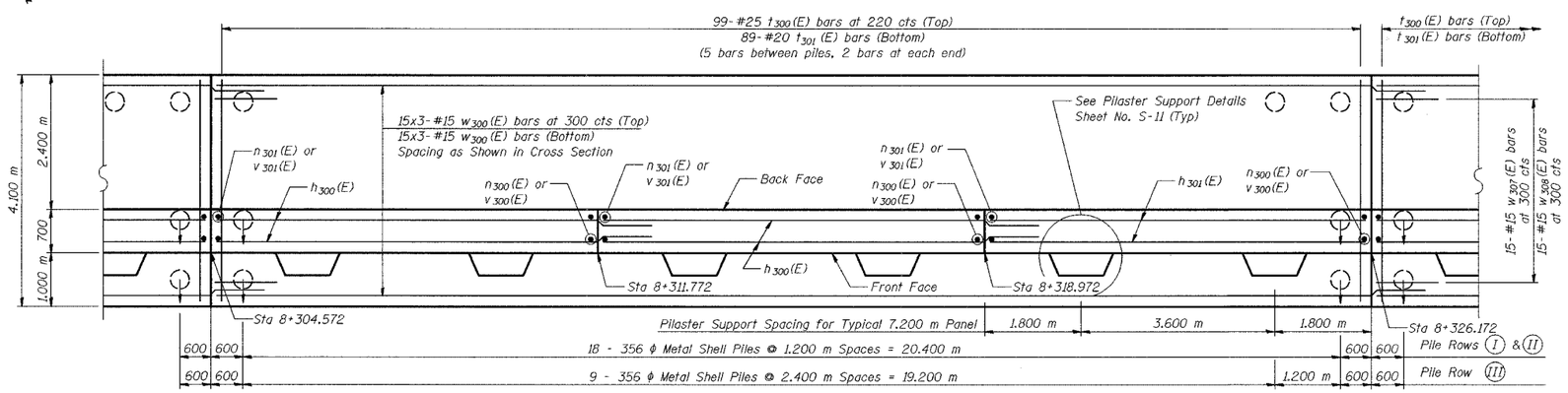

FOOTING PLAN

NOTES:

See Sheet S-11 for Section A-A.

See Sheet S-12 for Expansion Joint Detail and Bill of Material.

See Sheet S-13 for Rustication details.

Stations are referenced to ℄ I-80/94.

Reinforcement bars designated (E) shall be epoxy coated.

All dimensions are in millimeters (mm) except as noted.

Bars indicated thus 20 x 3-#15 etc. indicates 20 lines of bars with 3 lengths per line.

DESIGNED	MJW
CHECKED	KFA
DRAWN	MJB
CHECKED	GSP

MINIMUM BAR LAPS
#15 bars = 640
#20 bars = 790

LEGEND
BF = Back Face
FF = Front Face
EF = Each Face

ILLINOIS DEPARTMENT OF TRANSPORTATION
I-80/94/US 6
KINGERY-BORMAN EXPRESSWAY
BURNHAM ROAD TO US 41

PLAN AND ELEVATION (3 OF 8)
SECTION 2626.2-R-1
LAKE COUNTY, INDIANA
STATION 8+268.572 TO STATION 8+445.954
STRUCTURE NO. 016-W857

DATE 07/04

AMERICAN CONSULTING ENGINEERS