ROUTE NO.	SECTION	COUNTY	TOTAL SHEETS	SHEET NO.
F.A.I. 80/94	2626.2-R-1	LAKE COUNTY, INDIANA	452	199
	ILL.94655	FED. AID PROJECT-		

SHEET NO. S-4
20 SHEETS

CONTRACT NO. 62113 INDOT DES. NO. 0100987

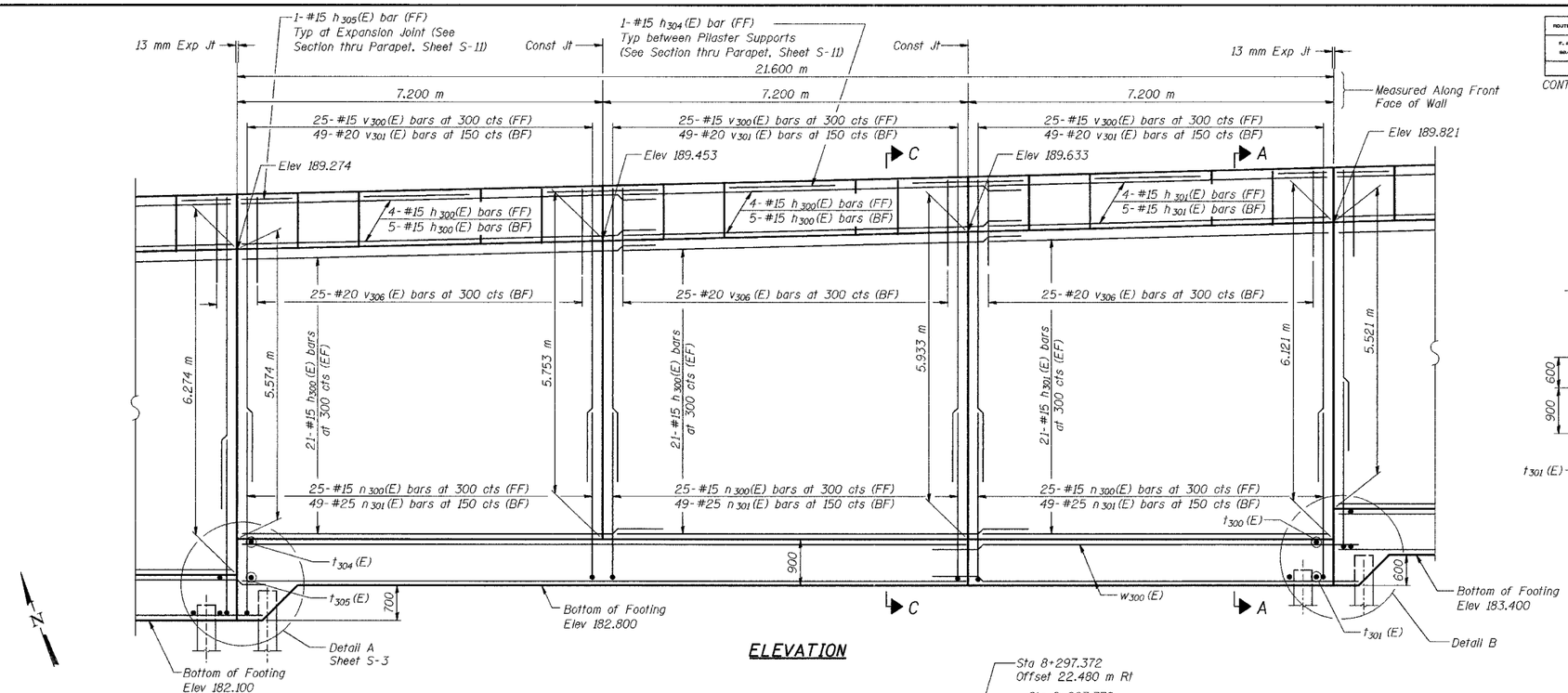

ELEVATION

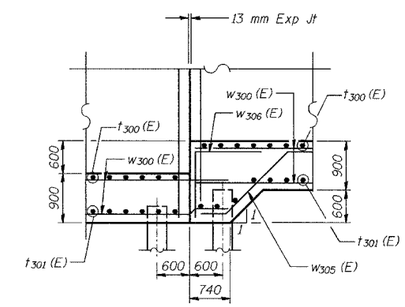

DETAIL B

NOTES:

See Sheet S-11 for Section A-A, Section C-C

See Sheet S-12 for Expansion Joint Detail and Bill of Material.

See Sheet S-13 for Rustication details.

Stations are referenced to ℄ I-80/94.

Reinforcement bars designated (E) shall be epoxy coated.

All dimensions are in millimeters (mm) except as noted.

Bars indicated thus 20 x 3-#15 etc. indicates 20 lines of bars with 3 lengths per line.

The Contractor shall locate all utilities (existing and new) prior to driving piles, by exploratory test pits and/or probes. The cost of locating utilities shall be included with Pile, Concrete, Steel Shell Encased, 6.35 mm, 356 mm. Any conflicts between the utilities and the proposed piles shall be reported in writing to the Bureau of Bridges and Structures for further disposition. Piles within 3 meters horizontally of actual utility location shall be preaugered/precored to the greater of bottom of the utility or 3 meter depth to maintain utility in original vertical and horizontal position. The diameter of preaugered/precored hole shall be the same diameter as outside diameter of pile. The cost of the preaugering/precoring shall be included with Pile, Concrete, Steel Shell Encased, 6.35 mm, 356 mm.

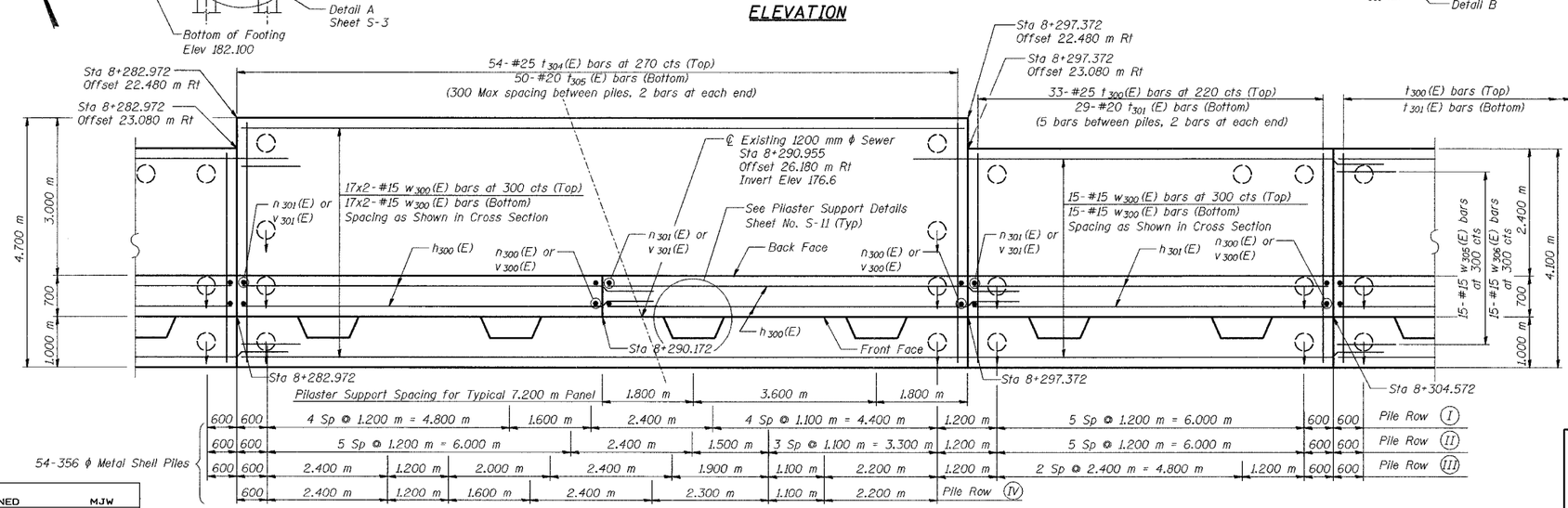

FOOTING PLAN

DESIGNED	MJW
CHECKED	KFA
DRAWN	MJB
CHECKED	GSP

MINIMUM BAR LAPS

#15 bars = 640
#20 bars = 790

LEGEND

BF = Back Face
FF = Front Face
EF = Each Face

ILLINOIS DEPARTMENT OF TRANSPORTATION
I-80/94/US 6
KINGERY-BORMAN EXPRESSWAY
BURNHAM ROAD TO US 41

PLAN AND ELEVATION (2 OF 8)
SECTION 2626.2-R-1
LAKE COUNTY, INDIANA
STATION 8+268.572 TO STATION 8+445.954
STRUCTURE NO. 016-W857

DATE 07/04

AMERICAN CONSULTING ENGINEERS