ROUTE NO.	SECTION	COUNTY	TOTAL SHEETS	SHEET NO.
F.A.I. 80/94	2626.2-R-1	LAKE COUNTY, INDIANA	452	190
		BRIDGE	FED. AID PROJECT-	

SHEET NO. S-14
19 SHEETS

CONTRACT NO. 62113 INDOT DES. NO. 0100987

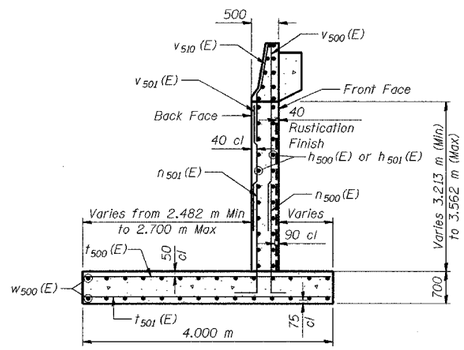

SECTION A-A

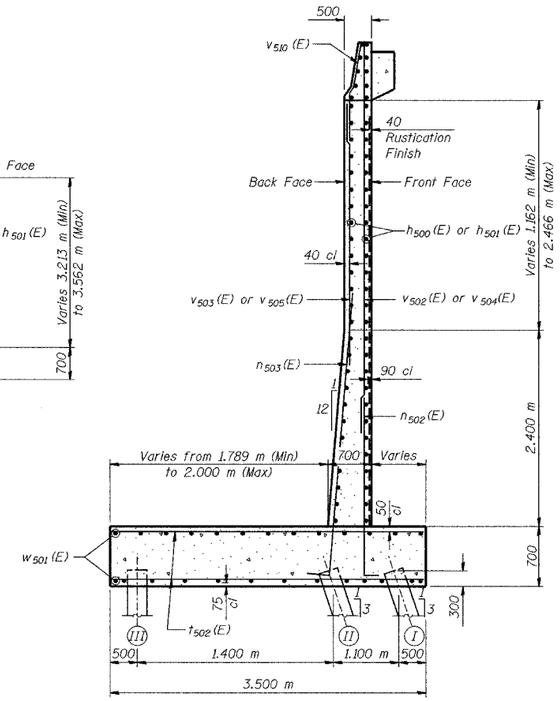

SECTION B-B

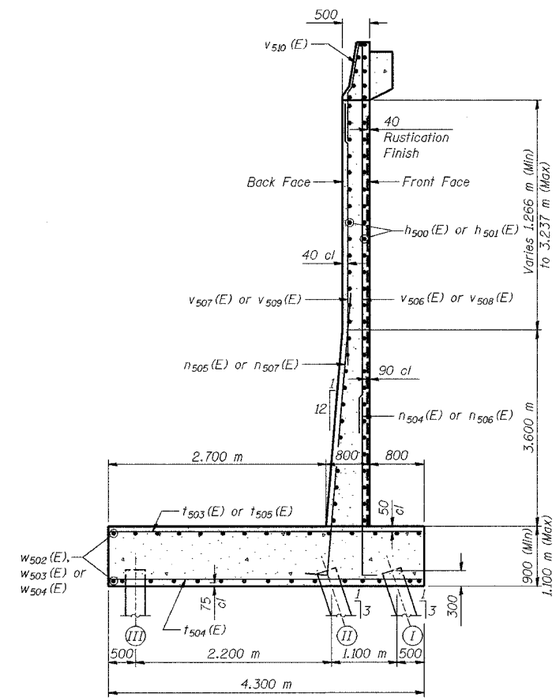

SECTION C-C

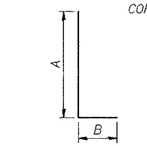

BARS n500 (E) thru n507 (E)

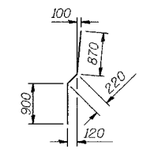

BARS v510 (E)

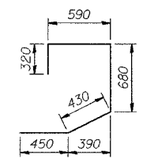

BAR v511 (E)

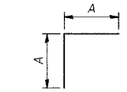

BARS w506 (E), w508 (E) or w510 (E)

BILL OF MATERIAL

Bar	No.	Size	Length (m)	Shape
h500 (E)	925	#15	7.84	—
h501 (E)	516	#15	7.10	—
h502 (E)	54	#15	2.30	—
h503 (E)	24	#15	1.10	—
h504 (E)	264	#20	2.86	⌣
n500 (E)	200	#15	2.01	L
n501 (E)	280	#20	2.07	L
n502 (E)	250	#15	3.49	L
n503 (E)	300	#25	3.63	L
n504 (E)	150	#15	4.89	L
n505 (E)	222	#25	5.03	L
n506 (E)	225	#15	5.09	L
n507 (E)	441	#25	5.23	L
t500 (E)	341	#25	3.90	—
t501 (E)	195	#20	3.90	—
t502 (E)	601	#20	3.40	—
t503 (E)	167	#25	4.20	—
t504 (E)	360	#20	4.20	—
t505 (E)	284	#30	4.20	—
v500 (E)	200	#15	4.08	—
v501 (E)	280	#20	3.08	—
v502 (E)	100	#15	3.14	—
v503 (E)	120	#20	2.14	—
v504 (E)	150	#15	4.00	—
v505 (E)	180	#20	3.01	—
v506 (E)	150	#15	3.80	—
v507 (E)	222	#20	2.80	—
v508 (E)	225	#15	4.77	—
v509 (E)	441	#20	3.77	—
v510 (E)	802	#20	1.99	⌊
v511 (E)	396	#20	2.47	⌋
w500 (E)	196	#15	8.78	—
w501 (E)	234	#15	8.57	—
w502 (E)	180	#15	7.82	—
w503 (E)	180	#15	7.93	—
w504 (E)	90	#15	7.60	—
w505 (E)	15	#15	3.93	⌐
w506 (E)	15	#15	3.76	⌐
w507 (E)	13	#15	2.38	⌐
w508 (E)	13	#15	1.56	⌐
w509 (E)	15	#15	2.66	⌐
w510 (E)	15	#15	1.96	⌐
Test Pile, 356 mm		Each		4
Excavation, Foundation, Unclassified		m^3		4,173
Concrete, A, Substructure		m^3		1,550.7
Reinforcing Bars, Epoxy Coated		kg		101,320
Surface Seal (Estimated)		m^2		361
Pile, Concrete, Steel Shell Encased, 6.35 mm, 356 mm		m		4,014.0
Geocomposite Wall Drain		m^2		1,013
Pipe, Underdrain, Perf, 1.63 mm, 150 mm		m		246.0
Noise Abatement Wall Anchor Rod Assembly		Each		66

PILE DATA

Type - 356 ϕ Metal Shell
Capacity - 500 kN
Est. Length - 12.2 m
No. Reqd. - 329
Test Piles - 4

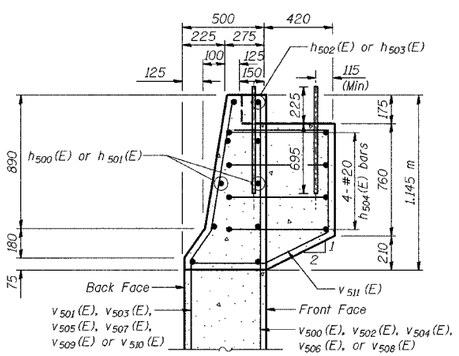

SECTION THRU PARAPET

NOTES:

See Sheet S-15 for Rustication details.

Reinforcement bars designated (E) shall be epoxy coated.

All dimensions are in millimeters (mm) except as noted.

See Typical Section on Sheet S-2 for Drainage Details and Surface Seal Limits.

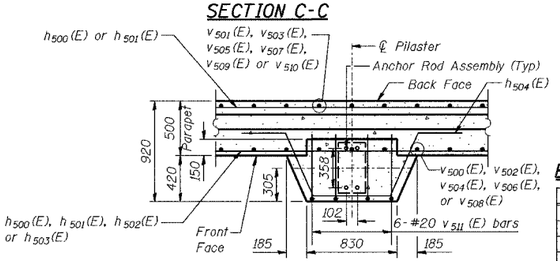

TYPICAL PILASTER SUPPORT - PLAN VIEW
(66 Locations)

BAR DIMENSIONS

Bar	A	B
n500 (E)	1.75 m	260
n501 (E)	1.75 m	320
n502 (E)	3.23 m	260
n503 (E)	3.23 m	400
n504 (E)	4.63 m	260
n505 (E)	4.63 m	400
n506 (E)	4.83 m	260
n507 (E)	4.83 m	400
w505 (E)	2.65 m	1.88 m
w506 (E)	1.88 m	-
w507 (E)	1.10 m	780
w508 (E)	780	-
w509 (E)	1.38m	980
w510 (E)	980	-

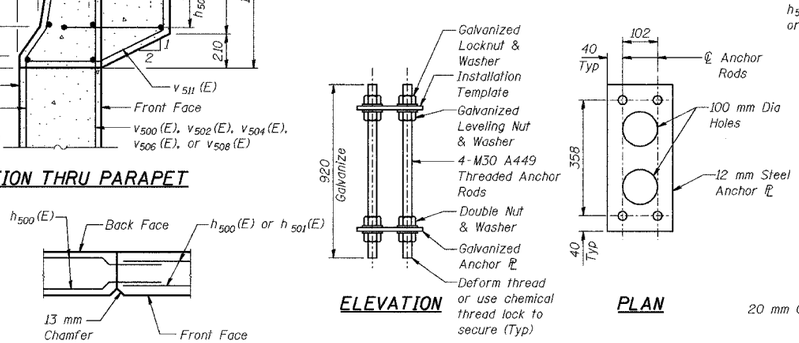

ELEVATION

PLAN

NOISE ABATEMENT WALL ANCHOR ROD ASSEMBLY
(66 Req'd)

CONSTRUCTION JOINT DETAIL

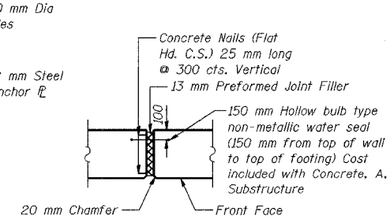

13 MM EXPANSION JOINT DETAIL

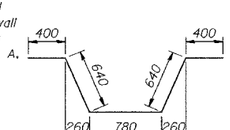

BAR h504 (E)

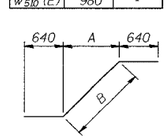

BARS w505 (E), w507 (E) or w509 (E)

DESIGNED	MJW
CHECKED	KFA
DRAWN	MJB
CHECKED	GSP

ILLINOIS DEPARTMENT OF TRANSPORTATION
I-80/94/US 6
KINGERY-BORMAN EXPRESSWAY
BURNHAM ROAD TO US 41

WALL SECTIONS AND DETAILS
SECTION 2626.2-R-1
LAKE COUNTY, INDIANA
STATION 7+960.424 TO STATION 8+199.354
STRUCTURE NO. 016-W922

DATE 07/04

AMERICAN CONSULTING ENGINEERS