ROUTE NO.	SECTION	COUNTY	TOTAL SHEETS	SHEET NO.
F.A.I. 65/94	2626.2-R-1	LAKE COUNTY, INDIANA	452	184
	ILLINOIS	FED. AID PROJECT-		

SHEET NO. S-8
19 SHEETS

CONTRACT NO. 62113 INDOT DES. NO. 0100987

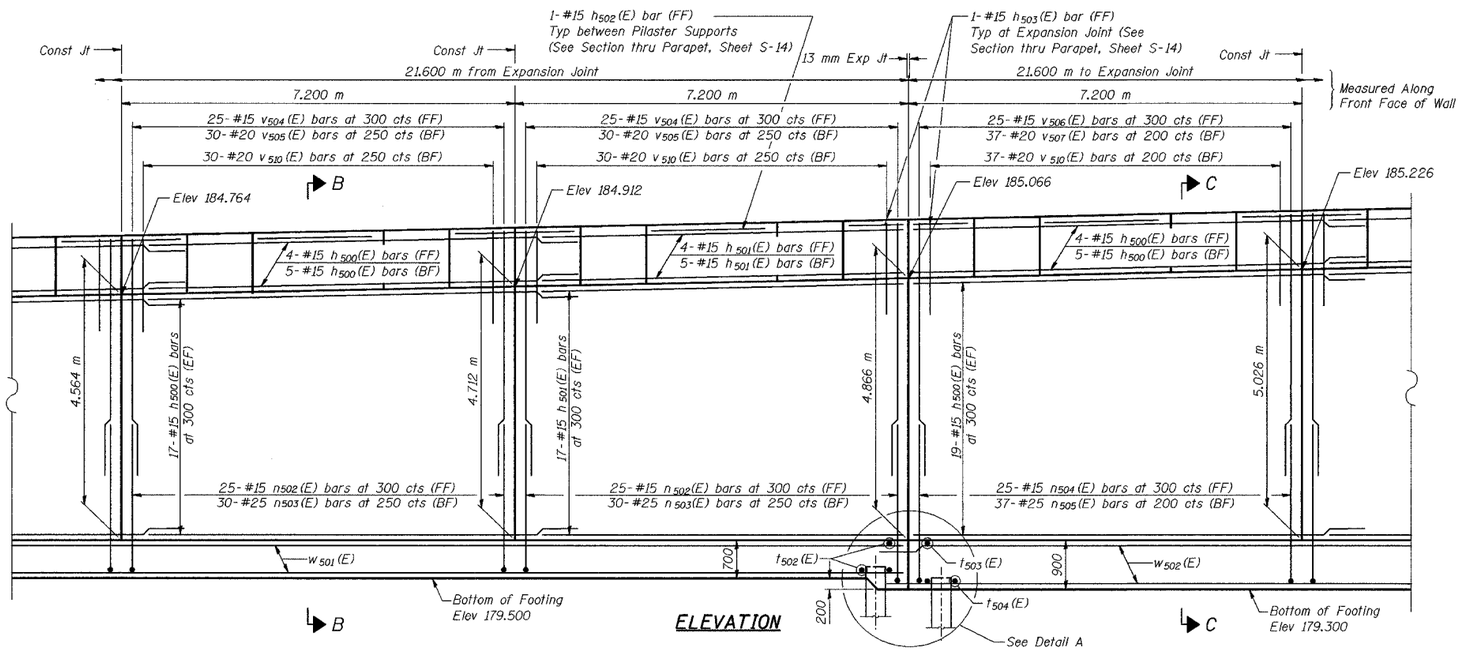

ELEVATION

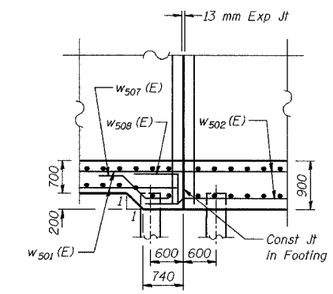

DETAIL A

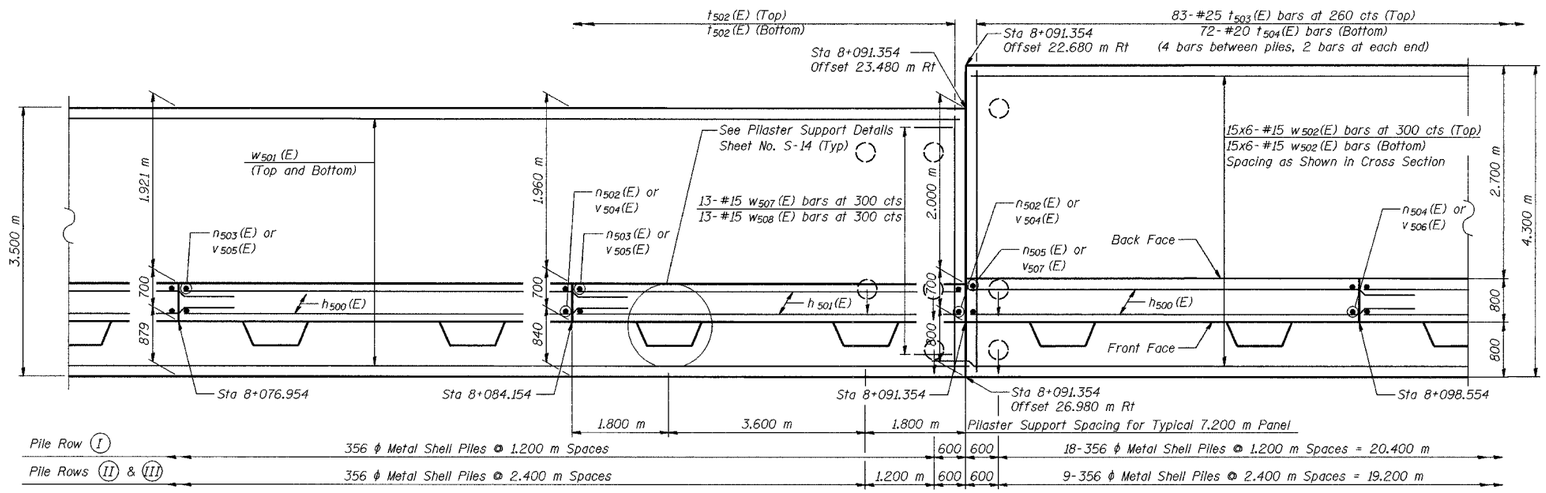

FOOTING PLAN

NOTES:

See Sheet S-14 for Section B-B, Section C-C, Expansion Joint Detail, and Bill of Material.

See Sheet S-15 for Rustication details.

Stations are referenced to ℄ I-80/94.

Reinforcement bars designated (E) shall be epoxy coated.

All dimensions are in millimeters (mm) except as noted.

Bars indicated thus 20x3-#15 atc. indicates 20 lines of bars with 3 lengths per line.

MINIMUM BAR LAPS

#15 bars = 640
#20 bars = 790

LEGEND

BF = Back Face
FF = Front Face
EF = Each Face

DESIGNED	MJW
CHECKED	KFA
DRAWN	MJB
CHECKED	GSP

ILLINOIS DEPARTMENT OF TRANSPORTATION
I-80/94/US 6
KINGERY-BORMAN EXPRESSWAY
BURNHAM ROAD TO US 41

PLAN AND ELEVATION (6 OF 11)
SECTION 2626.2-R-1
LAKE COUNTY, INDIANA
STATION 7+960.424 TO STATION 8+199.354
STRUCTURE NO. 016-W922

DATE 07/04

AMERICAN CONSULTING ENGINEERS