ROUTE NO.	SECTION	COUNTY	TOTAL SHEETS	SHEET NO.
F.A.I. 290/94	2626.2-R-1	COOK	452	173
		ILLINOIS	FED. AID PROJECT-	

SHEET NO. S-9

12 SHEETS

CONTRACT NO. 62113 INDOT DES. NO. 0100987

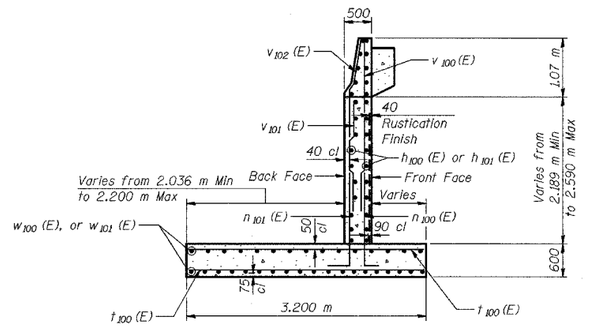

SECTION A-A

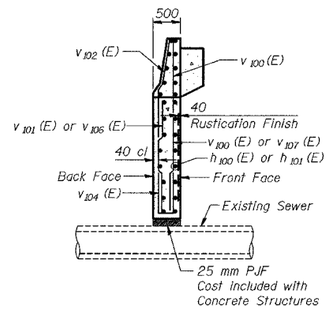

SECTION B-B

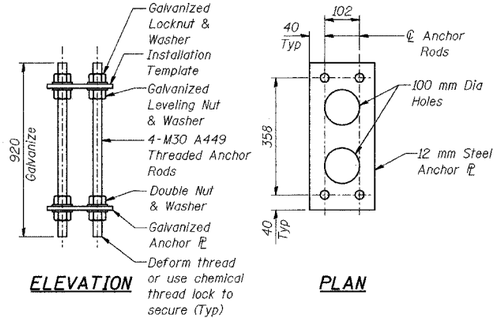

NOISE ABATEMENT WALL ANCHOR ROD ASSEMBLY

(39 Req'd)

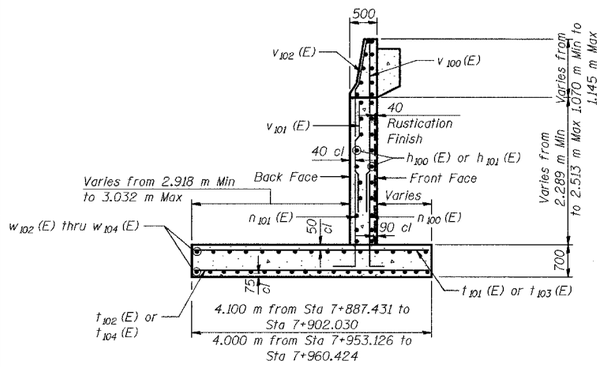

SECTION C-C

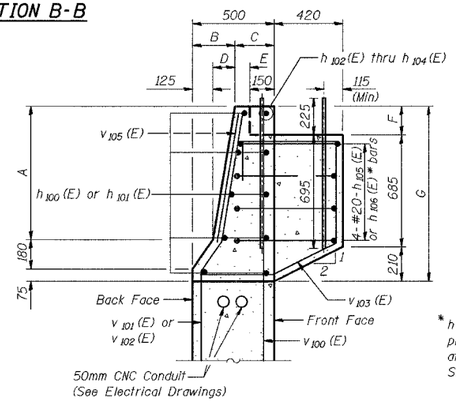

* h 106 (E) bars to be placed in pilaster at Start Wall Sta 7+821.737

SECTION THRU PARAPET

Dimension	Constant from Sta 7+821.737 to Sta 7+953.126	Varies from Sta 7+953.126 to Sta 7+960.424
A	815	815 to 890
B	215	215 to 225
C	285	285 to 275
D	90	90 to 100
E	135	135 to 125
F	175	175 to 250
G	1.070 m	1.070 m to 1.145 m

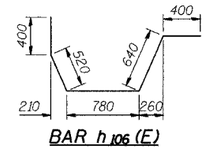

BAR h 106 (E)

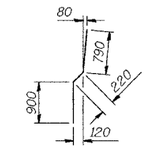

BARS v 102 (E)

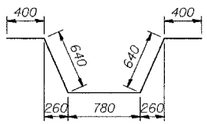

BAR h 105 (E)

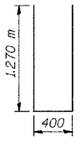

BARS v 104 (E)

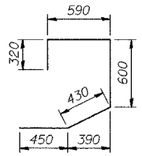

BAR v 103 (E)

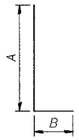

BARS n 100 (E) and n 101 (E)

BAR DIMENSIONS

Bar	A	B
n 100 (E)	1.90 m	260
n 101 (E)	1.90 m	320

BILL OF MATERIAL

Bar	No.	Size	Length (m)	Shape
h 100 (E)	340	#15	7.84	
h 101 (E)	211	#15	7.10	
h 102 (E)	29	#15	2.30	
h 103 (E)	13	#15	1.10	
h 104 (E)	3	#15	1.50	
h 105 (E)	152	#20	2.86	
h 106 (E)	4	#20	2.74	
h 107 (E)	8	#15	2.40	
n 100 (E)	463	#15	2.16	
n 101 (E)	463	#20	2.22	
t 100 (E)	1062	#20	3.10	
t 101 (E)	75	#25	4.00	
t 102 (E)	45	#20	4.00	
t 103 (E)	41	#25	3.90	
t 104 (E)	24	#20	3.90	
v 100 (E)	469	#15	2.98	
v 101 (E)	469	#20	1.98	
v 102 (E)	475	#20	1.91	
v 103 (E)	234	#20	2.39	
v 104 (E)	12	#20	2.94	
v 105 (E)	25	#20	0.87	
v 106 (E)	6	#15	2.28	
v 107 (E)	6	#20	1.28	
w 100 (E)	192	#15	8.75	
w 101 (E)	144	#15	9.18	
w 102 (E)	60	#15	4.24	
w 103 (E)	60	#15	2.87	
w 104 (E)	32	#15	5.65	
Structure Excavation			m3	1.284
Concrete Structures			m3	498.6
Protective Coat			m2	208
Reinforcement Bars, Epoxy Coated			kg	35,620
Geocomposite Wall Drain			m2	258
Pipe Underdrains for Structures 150 mm			m	145.0
Noise Abatement Wall Anchor Rod Assembly			Each	39

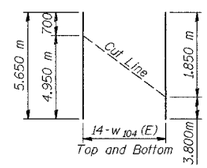

** FIELD CUTTING DIAGRAM

Order bars full length. Cut to fit as shown and place in footing on one side of pipe. Place remainder on other side of pipe.

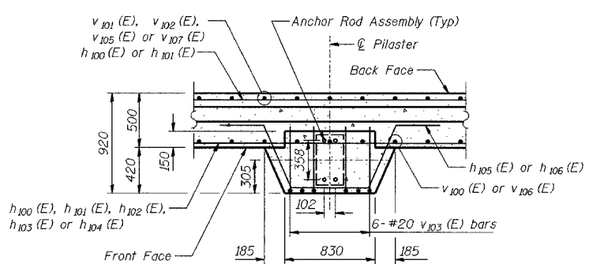

TYPICAL PILASTER SUPPORT - PLAN VIEW

(39 Locations)

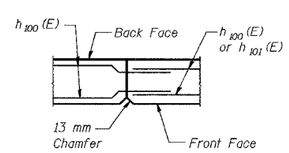

CONSTRUCTION JOINT DETAIL

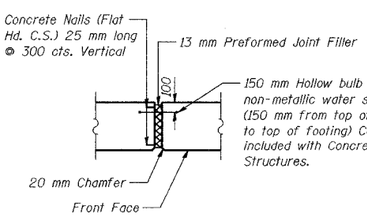

13 MM EXPANSION JOINT DETAIL

NOTES:

See Sheet S-10 for Rustication details.

Reinforcement bars designated (E) shall be epoxy coated.

All dimensions are in millimeters (mm) except as noted.

See Typical Section on S-2 for Drainage Details and Protective Coat Limits.

DESIGNED	MJW
CHECKED	KFA
DRAWN	MJB
CHECKED	GSP

ILLINOIS DEPARTMENT OF TRANSPORTATION
I-80/94/US 6
KINGERY-BORMAN EXPRESSWAY
BURNHAM ROAD TO US 41

WALL SECTIONS AND DETAILS
SECTION 2626.2-R-1
COOK COUNTY
STATION 7+821.737 TO STATION 7+960.424
STRUCTURE NO. 016-W855

DATE 07/04

AMERICAN CONSULTING ENGINEERS