| ROUTE NO. | SECTION | COUNTY | TOTAL SHEETS | SHEET NO. |
|---|---|---|---|---|
| F.A.I. 86/94 | 2626.2-R-1 | COOK | 452 | 170 |
| | | ILLINOIS | FED. AID PROJECT- | |

SHEET NO. S-6
12 SHEETS

CONTRACT NO. 62113 INDOT DES. NO. 0100987

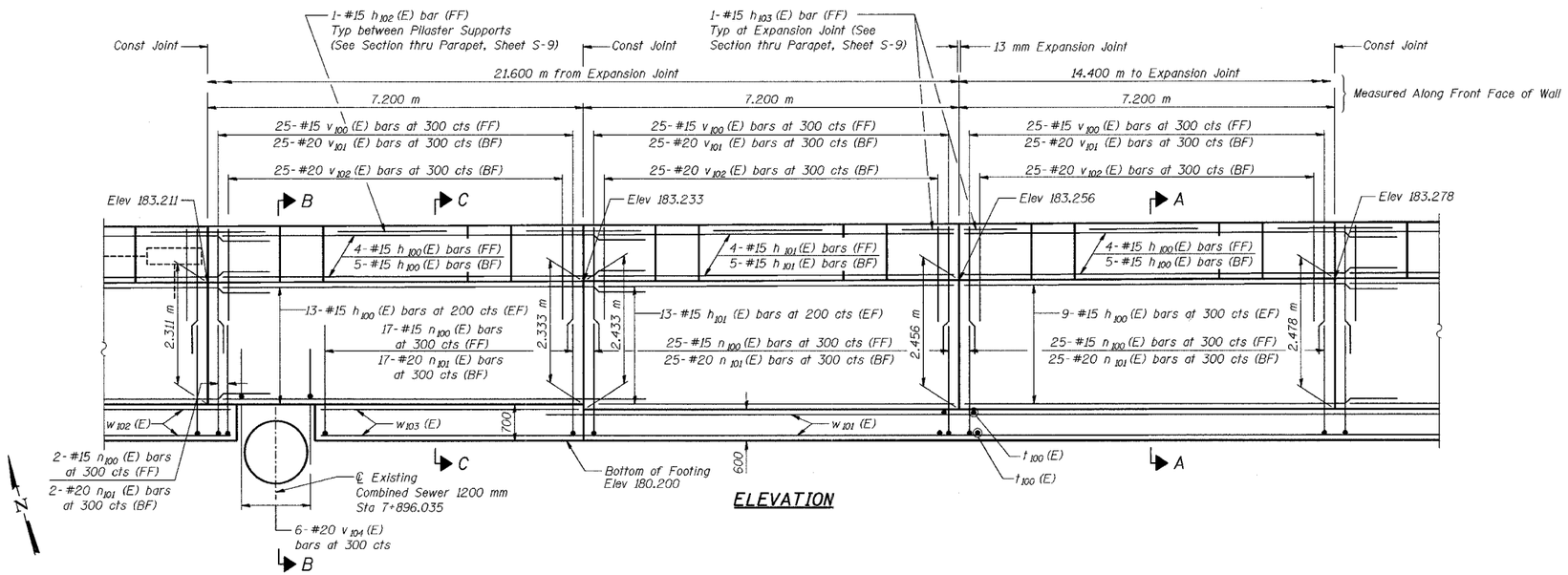


ELEVATION

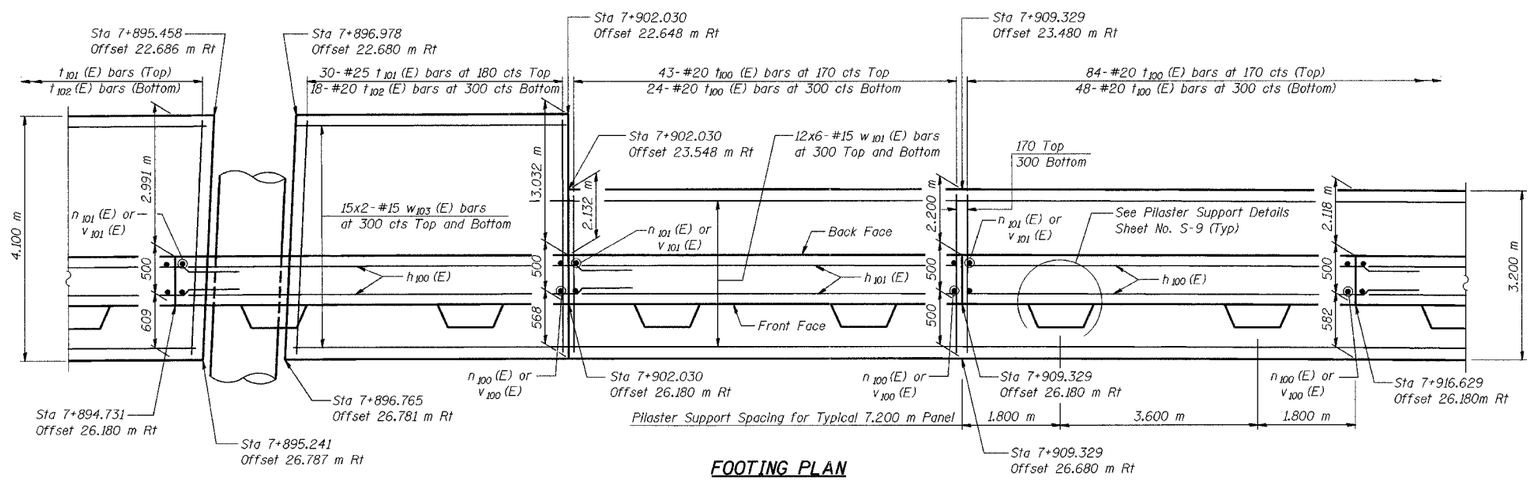


FOOTING PLAN

NOTES:

See Sheet S-9 for Section A-A, Section B-B, Section C-C, Expansion Joint Detail, and Bill of Material.

See Sheet S-10 for Rustication details.

Stations are referenced to ℄ I-80/94.

Reinforcement bars designated (E) shall be epoxy coated.

All dimensions are in millimeters (mm) except as noted.

Bars indicated thus 20 x 3-#15 etc. indicates 20 lines of bars with 3 lengths per line.

| | |
|---|---|
| DESIGNED | MJW |
| CHECKED | KFA |
| DRAWN | MJB |
| CHECKED | GSP |

MINIMUM BAR LAPS

#15 bars = 640
#20 bars = 790

LEGEND

BF = Back Face
FF = Front Face
EF = Each Face

ILLINOIS DEPARTMENT OF TRANSPORTATION
I-80/94/US 6
KINGERY-BORMAN EXPRESSWAY
BURNHAM ROAD TO US 41

**PLAN AND ELEVATION (4 OF 6)**
**SECTION 2626.2-R-1**
**COOK COUNTY**
**STATION 7+821.737 TO STATION 7+960.424**
**STRUCTURE NO. 016-W855**

DATE 07/04

AMERICAN CONSULTING ENGINEERS