ROUTE NO.	SECTION	COUNTY	TOTAL SHEETS	SHEET NO.
F.A.I. 80-94	2626.2-R-1	COOK	452	169
		ILLINOIS	FED. AID PROJECT-	

SHEET NO. S-5
12 SHEETS

CONTRACT NO. 62113 INDOT DES. NO. 0100987

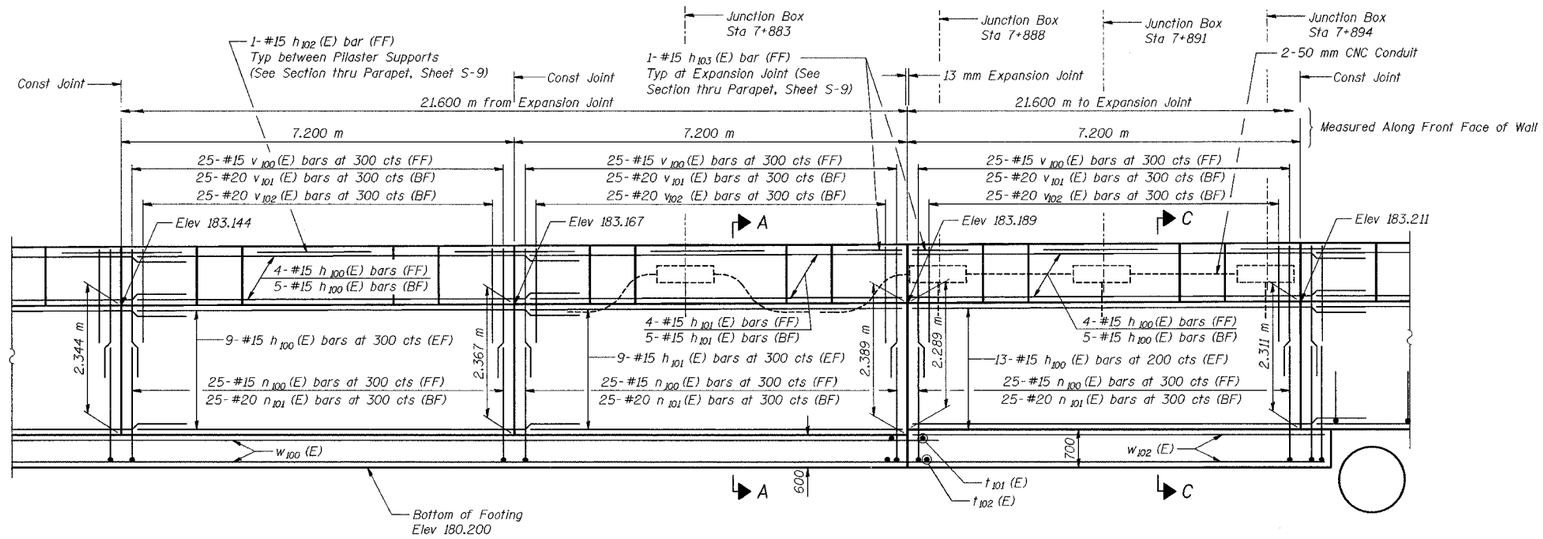

ELEVATION

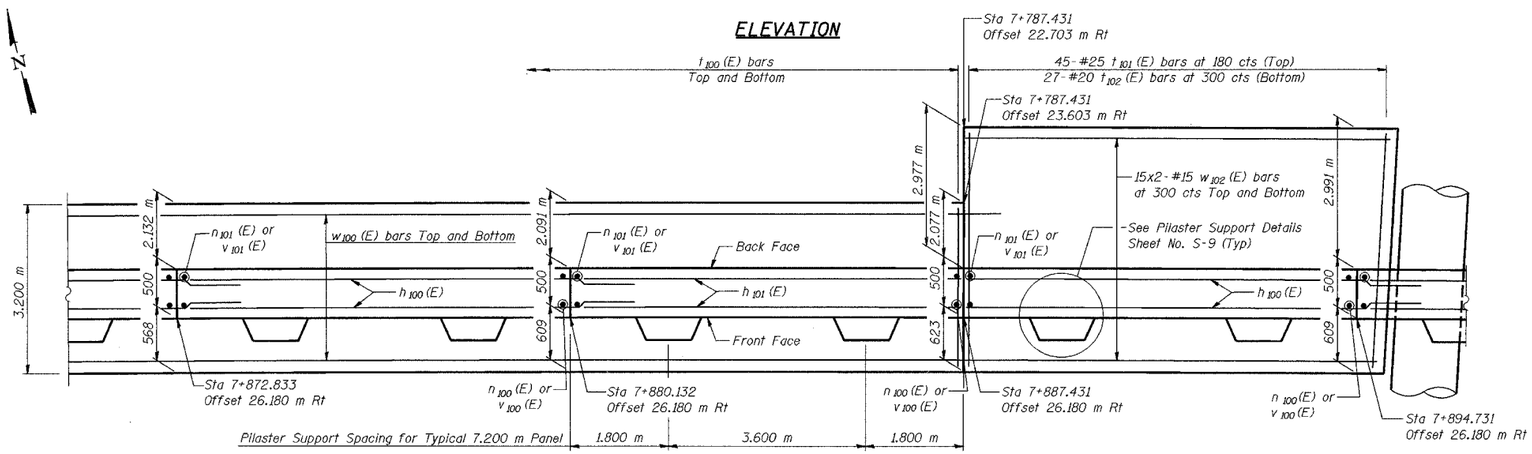

FOOTING PLAN

DESIGNED	MJW
CHECKED	KFA
DRAWN	MJB
CHECKED	GSP

MINIMUM BAR LAPS

#15 bars = 640
#20 bars = 790

LEGEND

BF = Back Face
FF = Front Face
EF = Each Face

NOTES:

See Sheet S-9 for Section A-A, Section C-C, Expansion Joint Detail, and Bill of Material.

See Sheet S-10 for Rustication details.

Stations are referenced to ℄ I-80/94.

Reinforcement bars designated (E) shall be epoxy coated.

All dimensions are in millimeters (mm) except as noted.

Bars indicated thus 20 x 3-#15 etc. indicates 20 lines of bars with 3 lengths per line.

See Electrical Drawings for Junction Box and Conduit Details.

ILLINOIS DEPARTMENT OF TRANSPORTATION
I-80/94/US 6
KINGERY-BORMAN EXPRESSWAY
BURNHAM ROAD TO US 41

PLAN AND ELEVATION (3 OF 6)
SECTION 2626.2-R-1
COOK COUNTY
STATION 7+821.737 TO STATION 7+960.424
STRUCTURE NO. 016-W855

DATE 07/04

AMERICAN CONSULTING ENGINEERS