ROUTE NO.	SECTION	COUNTY	TOTAL SHEETS	SHEET NO.
F.A.I. 80/94	2626.2-R-1	COOK	452	160
	ILL.DHS/B	FED. AID PROJECT-		

SHEET NO. S-16
20 SHEETS

CONTRACT NO. 62113 INDOT DES. NO. 0100987

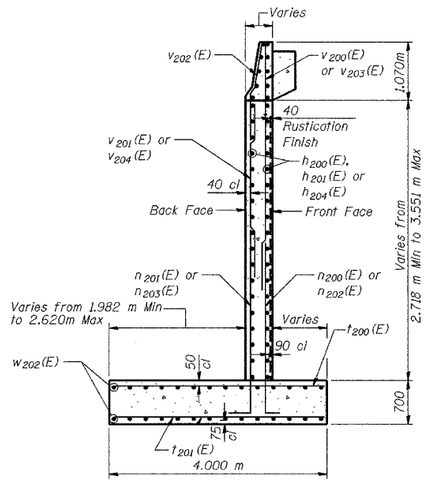

SECTION A-A

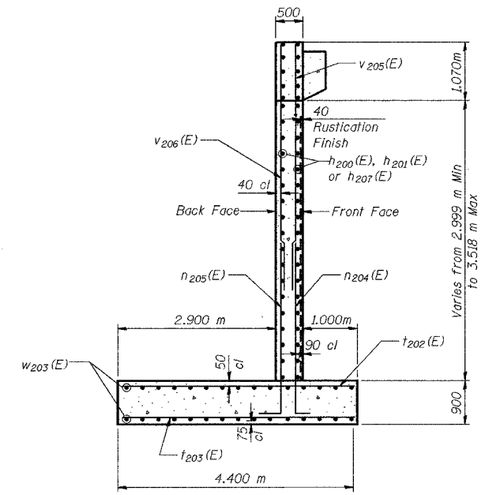

SECTION D-D

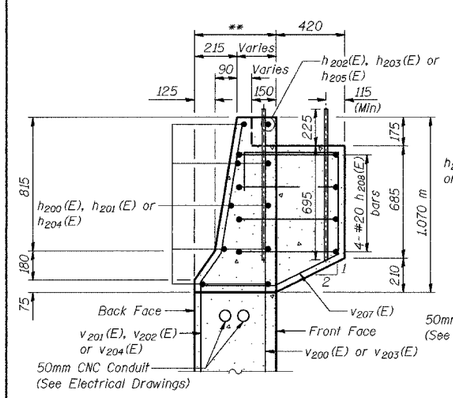

SECTION THRU PARAPET

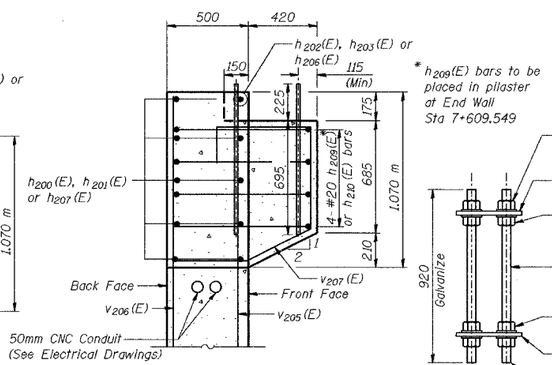

* h_{209}(E) bars to be placed in pilaster at End Wall Sta 7+609.549

SECTION THRU EXTENSION FOR GATEWAY

** Varies 1.018 m Max at Sta 7+701.848 to 500 Min at Sta 7+751.761.
500 from Sta 7+751.761 to Sta 7+893.827

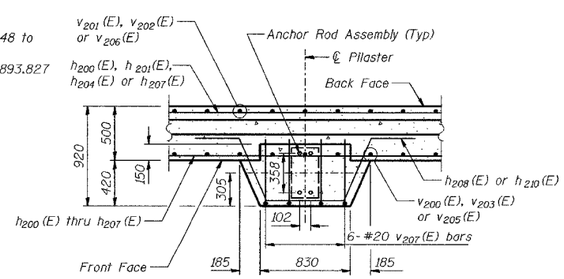

PILASTER SUPPORT - PLAN VIEW
(82 Locations)

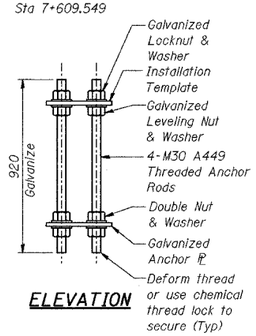

ELEVATION

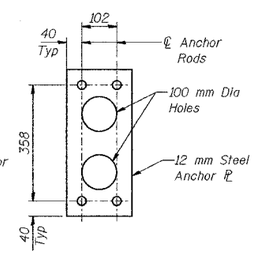

PLAN

NOISE ABATEMENT WALL ANCHOR ROD ASSEMBLY
(82 Req'd)

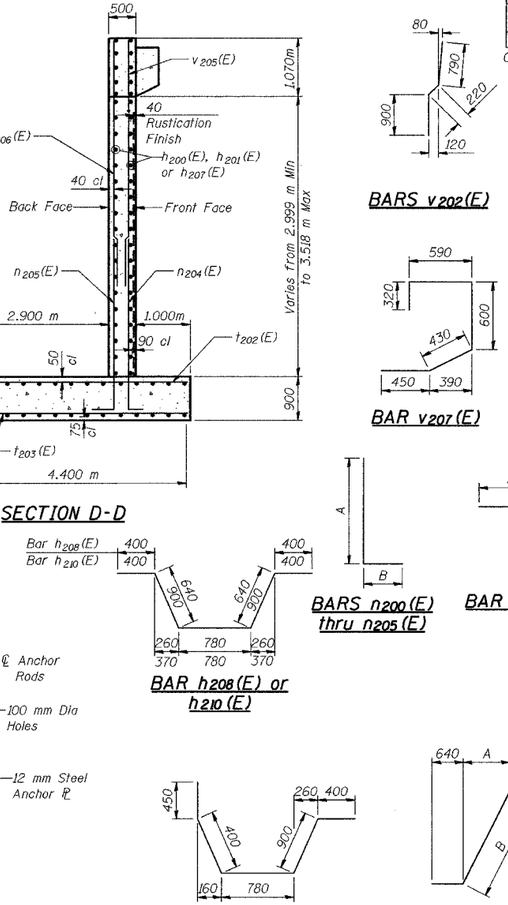

Bar h_{208}(E) 400
Bar h_{210}(E) 400

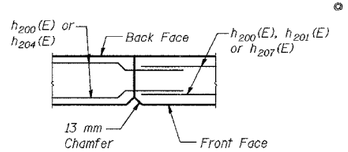

CONSTRUCTION JOINT DETAIL

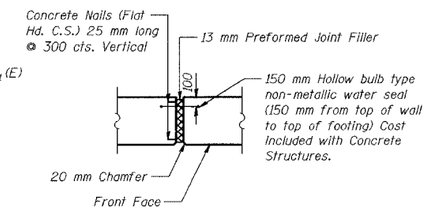

13 MM EXPANSION JOINT DETAIL

BILL OF MATERIAL

Bar	No.	Size	Length (m)	Shape
h_{200}(E)	790	#15	7.84	
h_{201}(E)	464	#15	7.10	
h_{202}(E)	60	#15	2.30	
h_{203}(E)	29	#15	1.10	
h_{204}(E)	31	#15	8.04	
h_{205}(E)	4	#15	1.45	
h_{206}(E)	3	#15	1.56	
h_{207}(E)	31	#15	7.28	
h_{208}(E)	220	#20	2.86	
h_{209}(E)	4	#20	2.93	
h_{210}(E)	108	#20	3.38	
h_{211}(E)	16	#15	0.60	
n_{200}(E)	201	#15	2.10	
n_{201}(E)	232	#20	2.16	
n_{202}(E)	475	#15	2.76	
n_{203}(E)	475	#25	2.90	
n_{204}(E)	326	#15	2.80	
n_{205}(E)	391	#25	2.94	
t_{200}(E)	1088	#25	3.90	
t_{201}(E)	657	#20	3.90	
t_{202}(E)	591	#25	4.30	
t_{203}(E)	317	#20	4.30	
v_{200}(E)	201	#15	3.51	
v_{201}(E)	232	#20	2.59	
v_{202}(E)	707	#20	1.91	
v_{203}(E)	475	#15	3.39	
v_{204}(E)	475	#20	2.47	
v_{205}(E)	326	#15	3.47	
v_{206}(E)	391	#20	3.62	
v_{207}(E)	492	#20	2.39	
w_{202}(E)	644	#15	9.11	
w_{203}(E)	352	#15	9.16	
w_{206}(E)	14	#15	3.49	
w_{207}(E)	14	#15	3.12	
Structure Excavation			m^3	4,139
Concrete Structures			m^3	1,547.6
Protective Coat			m^2	470
Reinforcement Bars, Epoxy Coated			kg	102,730
Geocomposite Wall Drain			m^2	782
Pipe Underdrains for Structures 150 mm			m	296.5
Noise Abatement Wall Anchor Rod Assembly			Each	82

NOTES:

See Sheet S-17 for Rustication details.

Reinforcement bars designated (E) shall be epoxy coated.

All dimensions are in millimeters (mm) except as noted.

See Typical Section on Sheet S-2 for Drainage Details and Protective Coat Limits.

BAR DIMENSIONS

Bar	A	B
n_{200}(E)	1.84 m	260
n_{201}(E)	1.84 m	320
n_{202}(E)	2.50 m	260
n_{203}(E)	2.50 m	400
n_{204}(E)	2.54 m	260
n_{205}(E)	2.54 m	400
w_{205}(E)	1.56 m	2.21 m
w_{207}(E)	1.56 m	-

DESIGNED	MJW
CHECKED	KFA
DRAWN	MJB
CHECKED	GSP

ILLINOIS DEPARTMENT OF TRANSPORTATION
I-80/94/US 6
KINGERY-BORMAN EXPRESSWAY
BURNHAM ROAD TO US 41

WALL SECTIONS AND DETAILS
SECTION 2626.2-R-1
COOK COUNTY
STATION 7+609.549 TO STATION 7+893.827
STRUCTURE NO. 016-W856

DATE 07/04

AMERICAN CONSULTING ENGINEERS