ROUTE NO.	SECTION	COUNTY	TOTAL SHEETS	SHEET NO.
F.A.I. 90/94	2626.2-R-1	COOK	452	158
		ILLINOIS	FED. AID PROJECT-	

SHEET NO. S-14
20 SHEETS

CONTRACT NO. 62113 INDOT DES. NO. 0100987

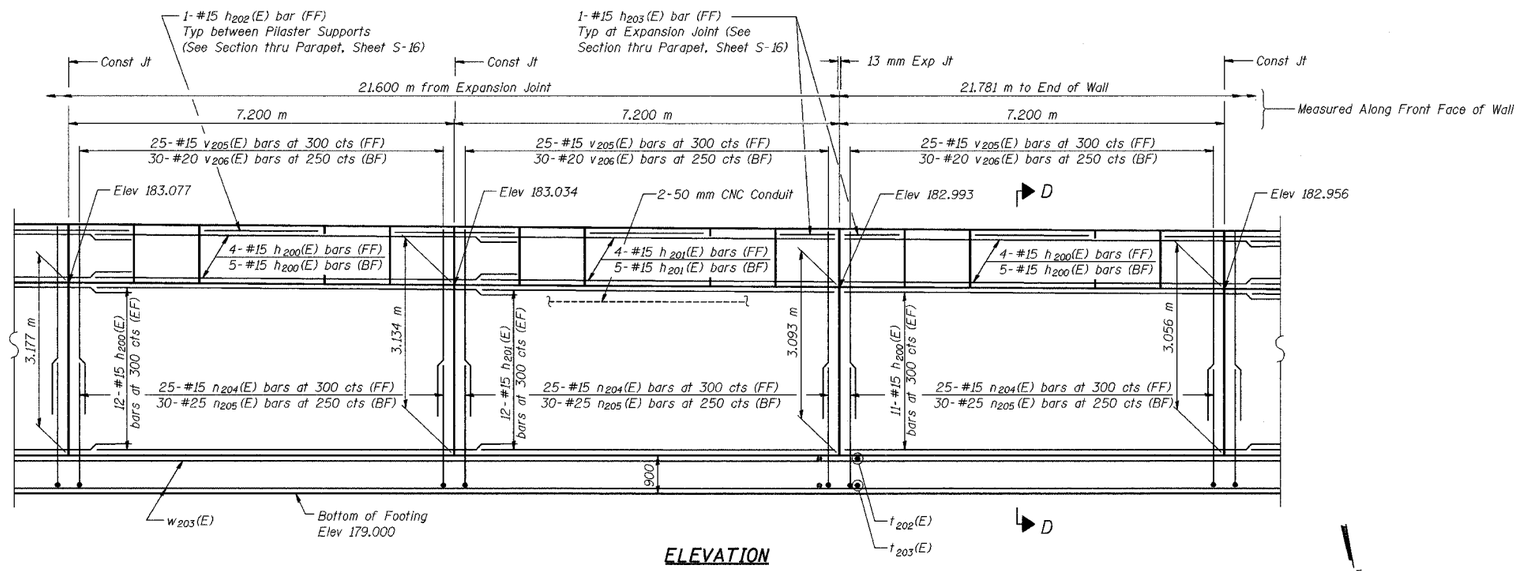

ELEVATION

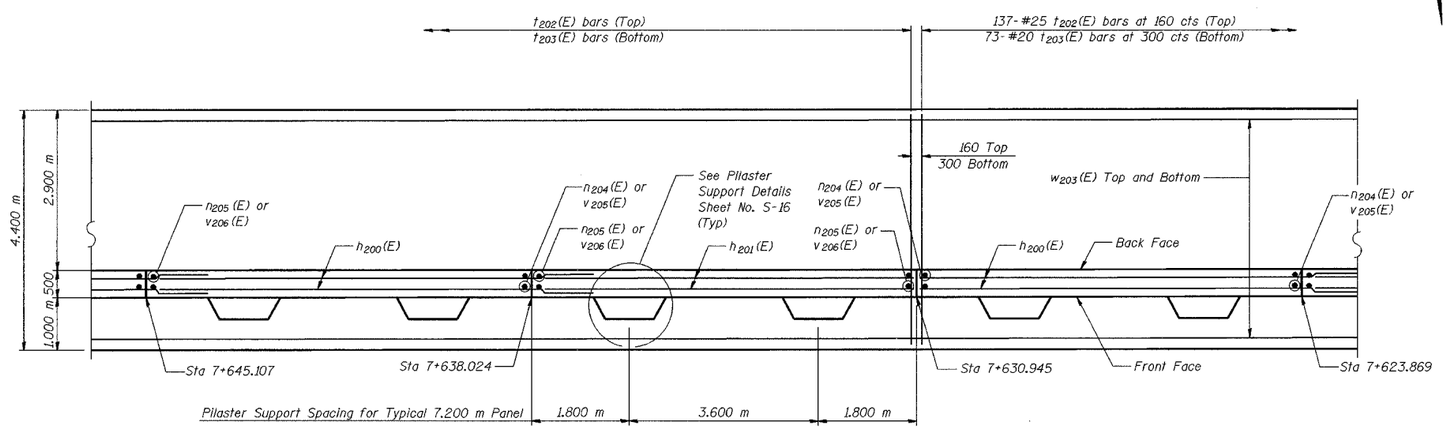

FOOTING PLAN

NOTES:

See Sheet S-16 for Section D-D, Expansion Joint Detail, and Bill of Material.

See Sheet S-17 for Rustication details.

Stations are referenced to ℄ I-80/94.

Reinforcement bars designated (E) shall be epoxy coated.

All dimensions are in millimeters (mm) except as noted.

See Electrical Drawings for Junction Box and Conduit Details.

DESIGNED	MJW
CHECKED	KFA
DRAWN	MJB
CHECKED	GSP

MINIMUM BAR LAPS

#15 bars = 640
#20 bars = 790

LEGEND

BF = Back Face
FF = Front Face
EF = Each Face

ILLINOIS DEPARTMENT OF TRANSPORTATION
I-80/94/US 6
KINGERY-BORMAN EXPRESSWAY
BURNHAM ROAD TO US 41

PLAN AND ELEVATION (12 OF 13)
SECTION 2626.2-R-1
COOK COUNTY
STATION 7+609.549 TO STATION 7+893.827
STRUCTURE NO. 016-W856

DATE 07/04

AMERICAN CONSULTING ENGINEERS