| ROUTE NO. | SECTION | COUNTY | TOTAL SHEETS | SHEET NO. |
|---|---|---|---|---|
| F.A.S. 68/94 | 2626.2-R-1 | COOK | 452 | 156 |
| | | ILLINOIS FED. AID PROJECT- | | |

SHEET NO. S-12
20 SHEETS

CONTRACT NO. 62113 INDOT DES. NO. 0100987

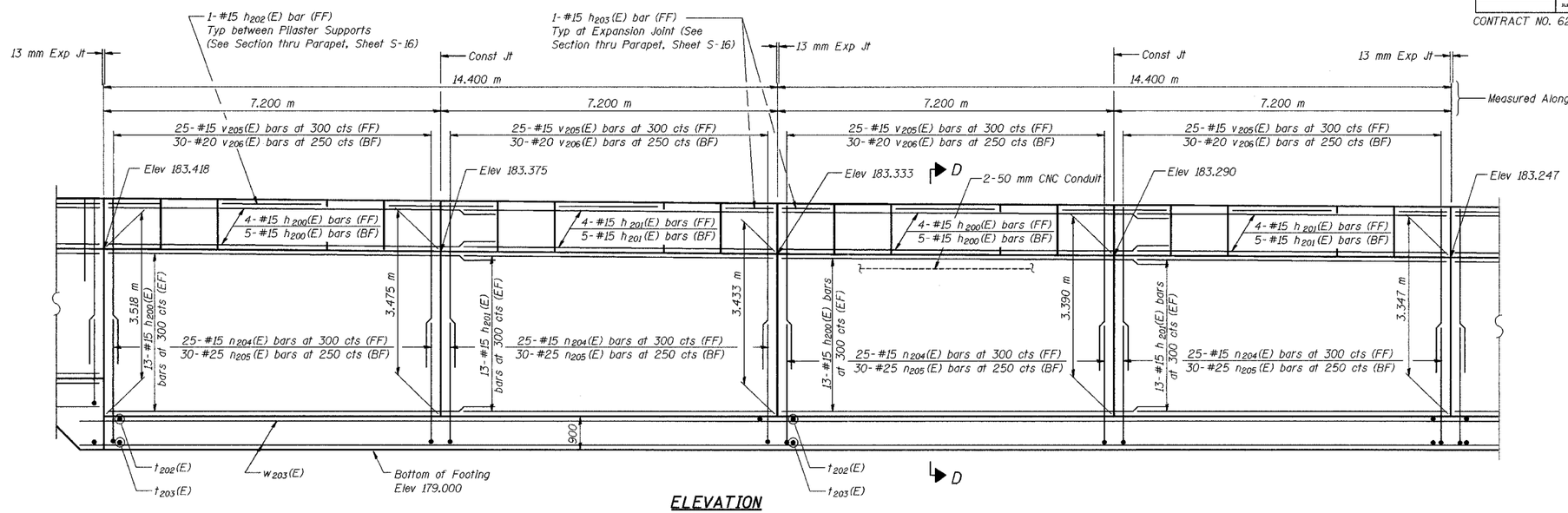


## ELEVATION

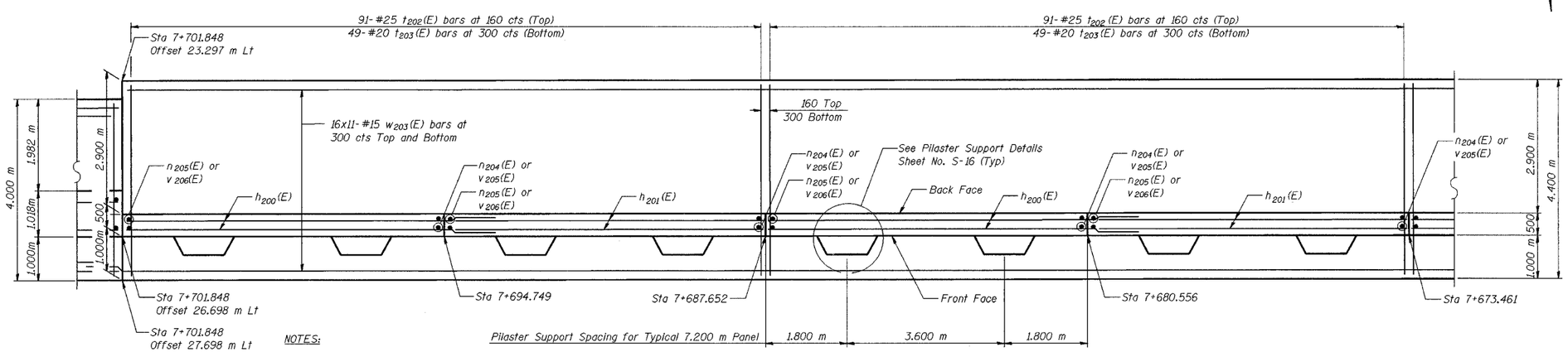


## FOOTING PLAN

NOTES:

See Sheet S-16 for Section D-D, Expansion Joint Detail, and Bill of Material.

See Sheet S-17 for Rustication details.

Stations are referenced to ℄ I-80/94.

Reinforcement bars designated (E) shall be epoxy coated.

All dimensions are in millimeters (mm) except as noted.

Bars indicated thus 20 x 3-#15 etc. indicates 20 lines of bars with 3 lengths per line.

See Electrical Drawings for Junction Box and Conduit Details.

| | |
|---|---|
| DESIGNED | MJW |
| CHECKED | KFA |
| DRAWN | MJB |
| CHECKED | GSP |

**MINIMUM BAR LAPS**

#15 bars = 640
#20 bars = 790

**LEGEND**

BF = Back Face
FF = Front Face
EF = Each Face

ILLINOIS DEPARTMENT OF TRANSPORTATION
I-80/94/US 6
KINGERY-BORMAN EXPRESSWAY
BURNHAM ROAD TO US 41

**PLAN AND ELEVATION (10 OF 13)**
**SECTION 2626.2-R-1**
**COOK COUNTY**
**STATION 7+609.549 TO STATION 7+893.827**
**STRUCTURE NO. 016-W856**

DATE 07/04

AMERICAN CONSULTING ENGINEERS