ROUTE NO.	SECTION	COUNTY	TOTAL SHEETS	SHEET NO.
F.A.I. 80/94	2626.2-R-1	COOK	452	148A
		ILLINOIS	FED. AID PROJECT-	

SHEET NO. S-4
20 SHEETS

CONTRACT NO. 62113 INDOT DES. NO. 0100987

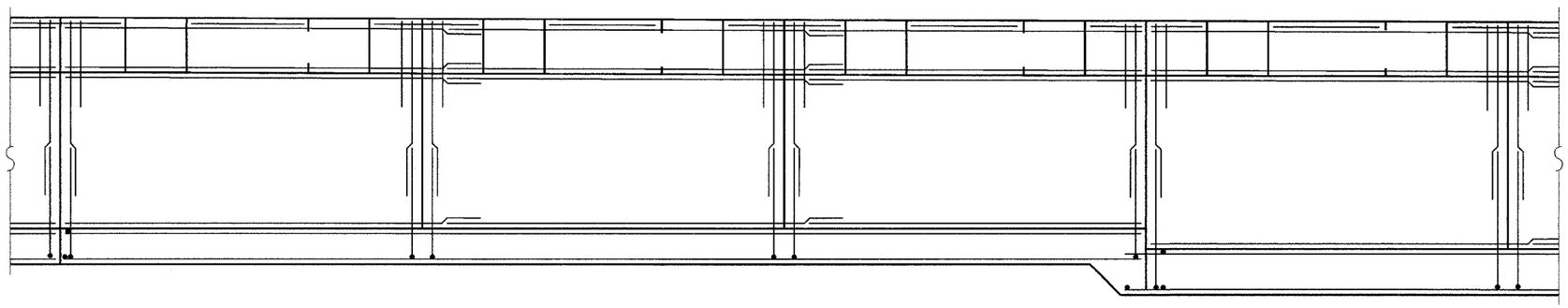

ELEVATION

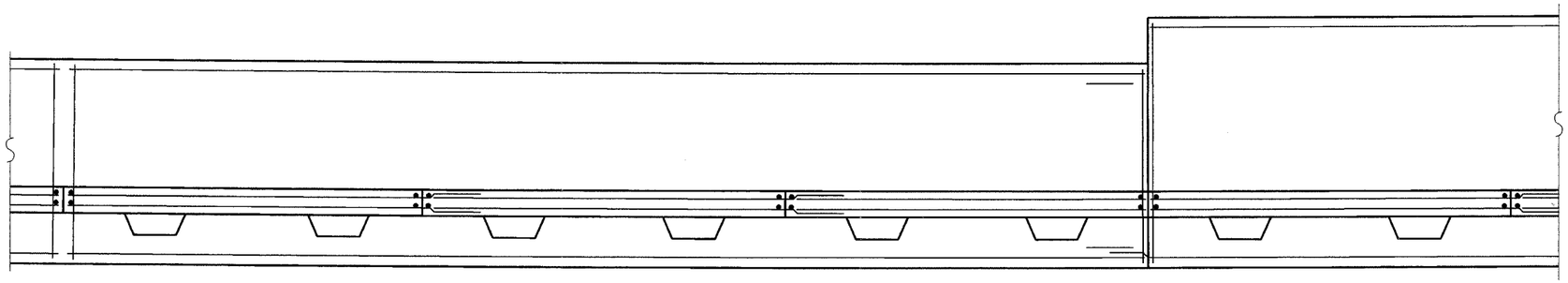

FOOTING PLAN

DESIGNED	MJW
CHECKED	KFA
DRAWN	MJB
CHECKED	GSP

FOR INFORMATION ONLY

ILLINOIS DEPARTMENT OF TRANSPORTATION
I-80/94/US 6
KINGERY-BORMAN EXPRESSWAY
BURNHAM ROAD TO US 41

PLAN AND ELEVATION (2 OF 13)
SECTION 2626.2-R-1
COOK COUNTY
STATION 7+609.549 TO STATION 7+893.827
STRUCTURE NO. 016-W856

DATE 07/04

AMERICAN CONSULTING ENGINEERS