ALL DIMENSIONS IN METERS EXCEPT PAY ITEMS AND UNLESS NOTED OTHERWISE.

F.A.I. RTE.	SECTION	COUNTY	TOTAL SHEETS	SHEET NO.
80/94	2626.2-R-1	COOK	452	144
STA.		TO STA.		
FED. ROAD DIST. NO.		ILLINOIS	FED. AID PROJECT	

CONTRACT #62113

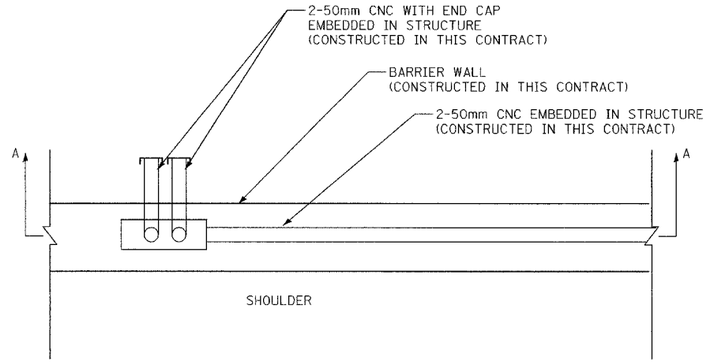

DETAIL 6

I-80, STATION 7+615 AND 7+620 N.T.S
ELEVATION VIEW

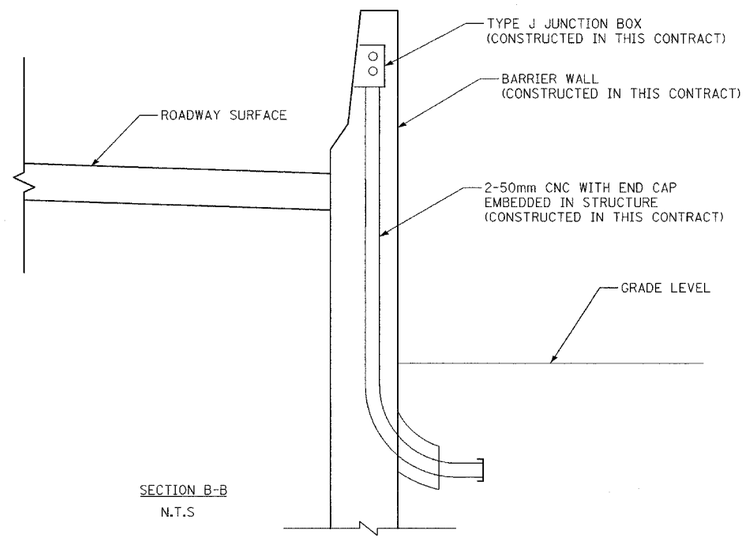

SECTION B-B
N.T.S

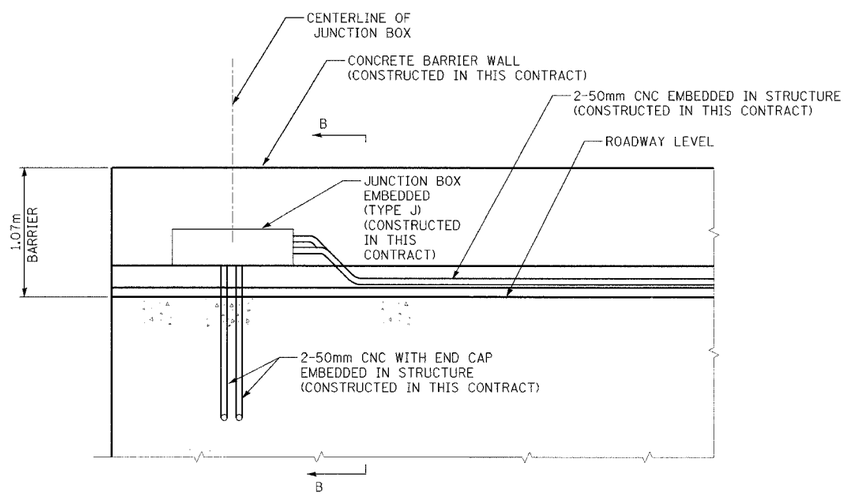

SECTION A-A
N.T.S

NOTE:
HANDHOLES AND CONDUITS IN DUCT BANKS UNDER PAVEMENT OR IN TRENCH CONSTRUCTED IN CONTRACT 62664. CONDUITS AND JUNCTION BOXES IN BARRIER WALL CONSTRUCTED IN THIS CONTRACT.

SHEET 11 OF 11

REVISIONS	
NAME	DATE

Burns & McDonnell
SINCE 1898

ILLINOIS DEPARTMENT OF TRANSPORTATION
I-80/94/US 6
KINGERY-BORMAN EXPRESSWAY
BURNHAM ROAD TO US 41
ELECTICAL INSTALLATION DETAIL
CONDUIT AND JUNCTION BOX ARRANGEMENT
STA. 7+615 AND 7+620

SCALE N.T.S — DRAWN BY JRH/MAP
DATE 07/04 — CHECKED BY DEM/CMW