F.A.I. RTE.	SECTION	COUNTY	TOTAL SHEETS	SHEET NO.
80/94	2626.2-R-1	COOK	452	109
STA.		TO STA.		
FED. ROAD DIST. NO.		ILLINOIS FED. AID PROJECT		

CONTRACT NO. 62113 INDOT DES. NO.

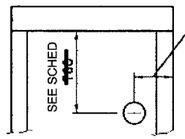

ELEVATION

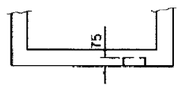

PLAN

AS SHOWN PROVIDE ON EACH FACE ONE (1) 75 DEEP DEPRESSION FOR USE AS UNDERDRAIN CONNECTIONS.

USE: 125 DIAMETER FOR 100 P.U.
175 DIAMETER FOR 150 P.U.
225 DIAMETER FOR 200 P.U.

REFER TO PLANS FOR SIZE & LOCATIONS OF UNDERDRAIN

PIPE UNDERDRAIN CONNECTION DETAIL

REINFORCEMENT BAR SCHEDULE

	H	2.4-3.0 m	3.0-3.6 m	3.6-4.2 m	4.2-5.5 m	5.5-6.7 m
HORIZONTAL BARS IN WALLS	BAR SIZE	15	15	20	20	20
	SPACING	300	300	300	300	300
VERTICAL BARS IN WALLS	BAR SIZE	15	15	15	15	15
	SPACING	300	300	300	300	300
BARS IN BASE SLAB	BAR SIZE	15	15	15	15	15
	SPACING	300	300	300	300	300
	H	<3.0	>3.0 <3.6	>3.6 <4.2	>4.2 <5.5	>5.5 <6.7

NOTE: PLACE REINFORCEMENT PER STANDARD 602101

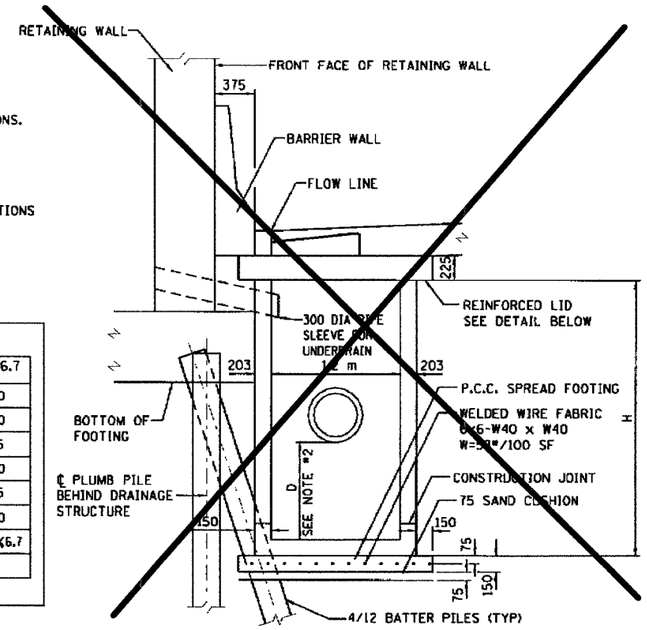

~~CATCH BASIN~~
~~ALONG RETAINING WALLS~~
SEE DRAINAGE DETAILS

DRAINAGE STRUCTURES ALONG BARRIER WALL

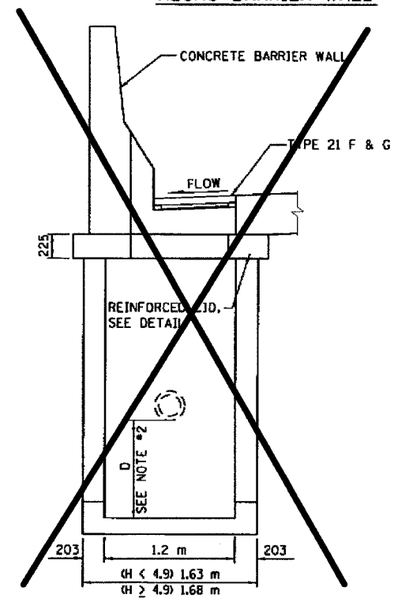

1.2x0.9 WITH ONE TYPE 21 F&G

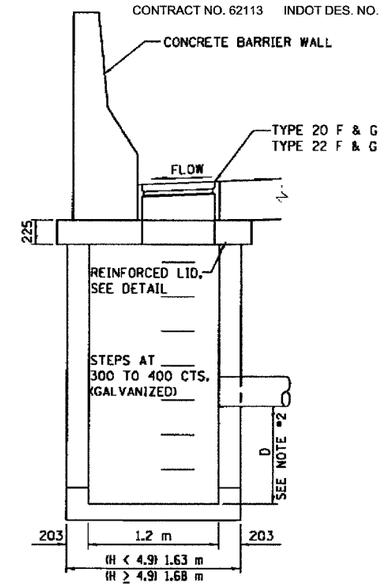

CATCH BASIN 1.2x0.9
CATCH BASIN 1.2x1.5

NOTES:

1. DRAINAGE STRUCTURE SHALL CONFORM TO I.D.O.T. STANDARD 602101 EXCEPT AS NOTED.
2. D = ~~6 m FOR INLETS~~ D = ~~900 FOR C.B.'S.~~ SEE DRAINAGE STRUCTURE SCHEDULE
3. WHEN H ≥ 4.9m , THICKNESS OF WALL AND BASE SLAB SHALL BE INCREASED TO 225.
4. SAND CUSHION SHALL CONFORM TO THE REQUIREMENTS OF ARTICLE 1003.01 (FA1 OR FA2).
5. THE FOOTING WILL NOT BE PAID FOR SEPARATELY, BUT SHALL BE CONSIDERED INCLUDED IN THE COST OF THE DRAINAGE STRUCTURE.
6. ALL DIMENSIONS IN MILLIMETERS UNLESS OTHER WISE NOTED.
7. SEE STANDARD 602701 FOR DETAILS OF STEPS.
8. WHERE THE ADJACENT SHOULDER OR PAVEMENT THICKNESS EXCEEDS THAT OF THE NEW FRAME, THE CONTRACTOR SHALL INSTALL THE CATCH BASIN LID FLUSH OR LOWER THAN THE BOTTOM OF THE ADJACENT SHOULDER OR PAVEMENT AND ADJUST THE FRAME AND LID IN ACCORDANCE WITH APPLICABLE PORTIONS OF SECTION 503 OF THE STANDARD SPECIFICATIONS.
9. IN ADDITION TO THE REQUIRMENTS OF ARTICLE 602.15 OF THE STANDARD SPECIFICATIONS, THE CONTRACT UNIT PRICE FOR THE DRAINAGE STRUCTURE SHALL INCLUDE THE SAND CUSHION, ADJUSTING RINGS WHEN REQUIRED AND FURNISHING AND COMPACTING THE SPECIFIED BACKFILL MATERIAL.

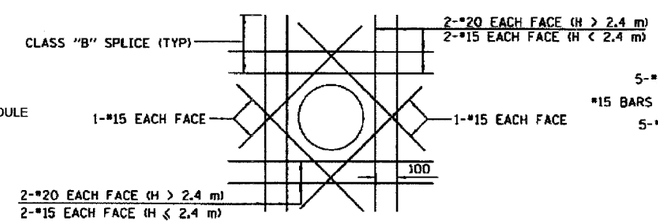

TYPICAL REINFORCEMENT DETAIL AROUND OPENINGS
(OPENING ≥ 300)

WHERE CLASS "B" SPLICE LENGTH ANCHORAGE IS NOT POSSIBLE, BARS SHOULD BE HOOKED.

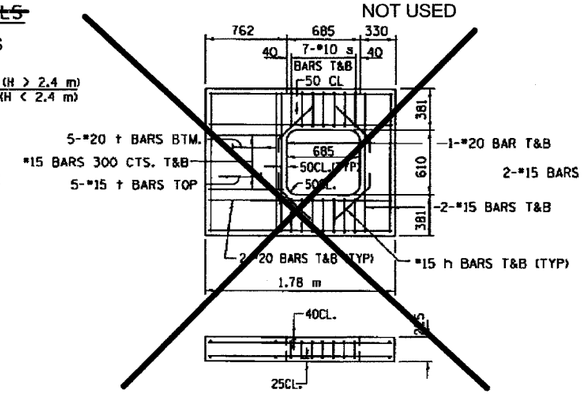

REINFORCED LID FOR TYPE 21 F&G
NOT USED

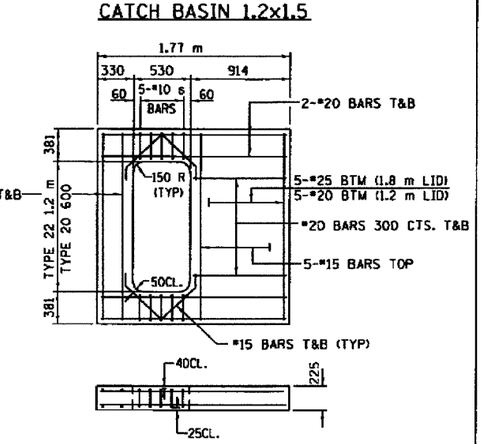

REINFORCED LID FOR TYPE 20 AND 22 F&G

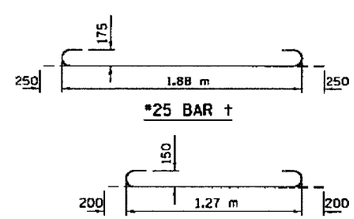

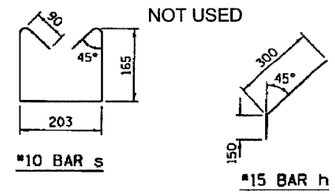

NOT USED

BAR DETAILS

REVISIONS	
NAME	DATE
ACE	02/04

ILLINOIS DEPARTMENT OF TRANSPORTATION
F.A.I. ROUTE 80/94 (KINGERY EXPRESSWAY)

CATCH BASIN AND INLET
1.2 x 0.9 AND 1.2 x 1.5
FOR H >2.4

SCALE NONE DRAWN BY ACE/CAD
DATE 09/03 CHECKED BY

CS-8 (METRIC)
REVISION DATE:

f:\Project\2014086\ME\Contract & Structure Information\basis\CS_8.dgn Thu Feb 26 07:04:21 2004