F.A.I. RTE.	SECTION	COUNTY	TOTAL SHEETS	SHEET NO.
80/94	2626.2-R-1	COOK	452	108
STA.		TO STA.		
FED. ROAD DIST. NO.		ILLINOIS	FED. AID PROJECT	

CONTRACT NO. 62113 INDOT DES. NO. 0100987

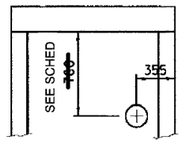

ELEVATION

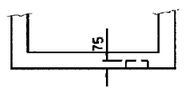

PLAN

AS SHOWN PROVIDE ON EACH FACE ONE (1) 75 DEEP DEPRESSION FOR USE AS UNDERDRAIN CONNECTIONS.

USE: 125 DIAMETER FOR 100 P.U.
175 DIAMETER FOR 150 P.U.
225 DIAMETER FOR 200 P.U.

REFER TO PLANS FOR SIZE & LOCATIONS OF UNDERDRAIN

PIPE UNDERDRAIN CONNECTION DETAIL

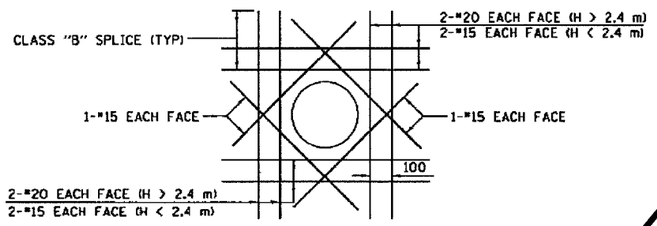

TYPICAL REINFORCEMENT DETAIL
AROUND OPENINGS
(OPENNING ≥ 300)

WHERE CLASS "B" SPLICE LENGTH ANCHORAGE IS NOT POSSIBLE, BARS SHOULD BE HOOKED.

NOTES:

1. DRAINAGE STRUCTURE SHALL CONFORM TO I.D.O.T. STANDARD 602101 EXCEPT AS NOTED.
2. D = ~~0 m FOR INLETS~~ SEE DRAINAGE STRUCTURE SCHEDULE
   D = ~~300 FOR C.B.'S.~~
3. SAND CUSHION SHALL CONFORM TO THE REQUIREMENTS OF ARTICLE 1003.01 (FA1 OR FA2).
4. THE FOOTING WILL NOT BE PAID FOR SEPARATELY, BUT SHALL BE CONSIDERED INCLUDED IN THE COST OF THE DRAINAGE STRUCTURE.
5. REINFORCEMENT FOR STRUCTURE WALLS AND BASE SLAB SHALL BE IN ACCORDANCE WITH STD. 602101 FOR DEPTHS UP TO H=2.4 m
6. STEPS SHALL BE INCLUDED IN ALL STRUCTURES
7. ALL DIMENSIONS IN MILLIMETERS UNLESS OTHER WISE NOTED.
8. SEE STANDARD 602701 FOR DETAILS OF STEPS.
9. WHERE THE ADJACENT SHOULDER OR PAVEMENT THICKNESS EXCEEDS THAT OF THE NEW FRAME, THE CONTRACTOR SHALL INSTALL THE CATCH BASIN LID FLUSH OR LOWER THAN THE BOTTOM OF THE ADJACENT SHOULDER OR PAVEMENT AND ADJUST THE FRAME AND LID IN ACCORDANCE WITH APPLICABLE PORTIONS OF SECTION 503 OF THE STANDARD SPECIFICATIONS.
10. IN ADDITION TO THE REQUIRMENTS OF ARTICLE 602.15 OF THE STANDARD SPECIFICATIONS, THE CONTRACT UNIT PRICE FOR THE DRAINAGE STRUCTURE SHALL INCLUDE THE SAND CUSHION, ADJUSTING RINGS WHEN REQUIRED AND FURNISHING AND COMPACTING THE SPECIFIED BACKFILL MATERIAL.

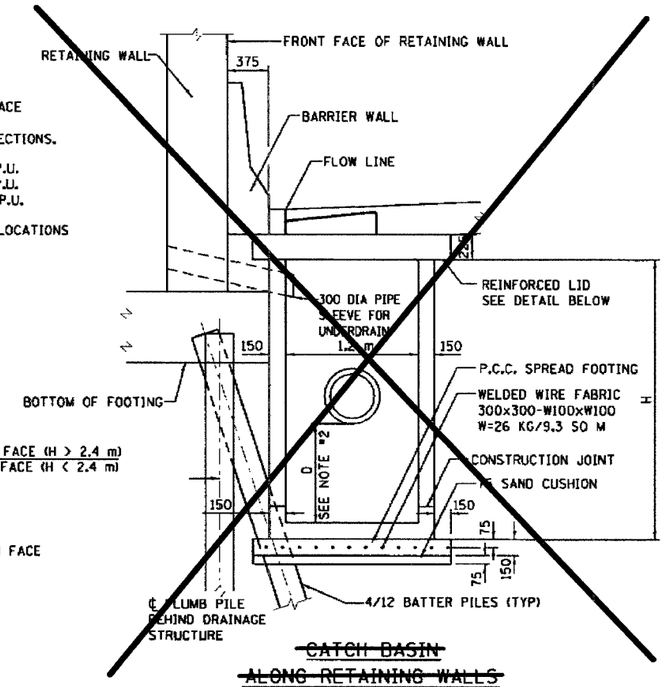

~~CATCH BASIN ALONG RETAINING WALLS~~

SEE DRAINAGE DETAILS

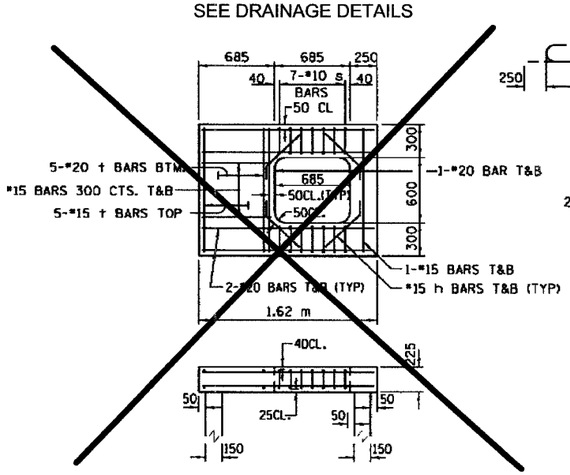

REINFORCED LID FOR TYPE 21 F&G

NOT USED

DRAINAGE STRUCTURES
ALONG BARRIER WALL

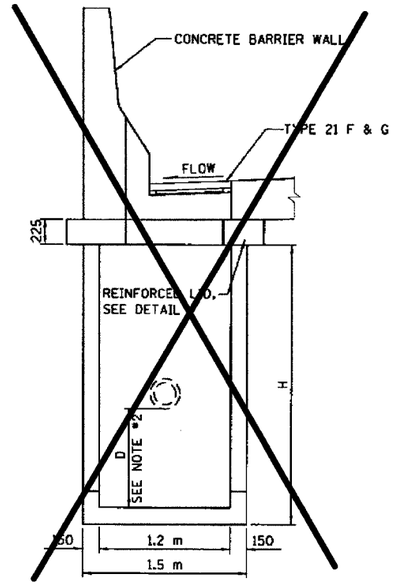

1.2x0.9 WITH ONE TYPE 21 F&G

NOT USED

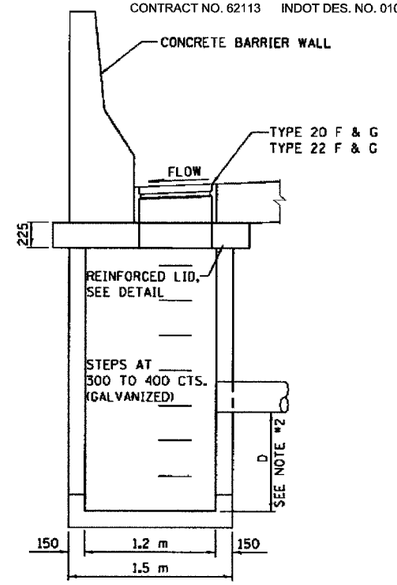

CATCH BASIN 1.2x0.9
CATCH BASIN 1.2x1.5

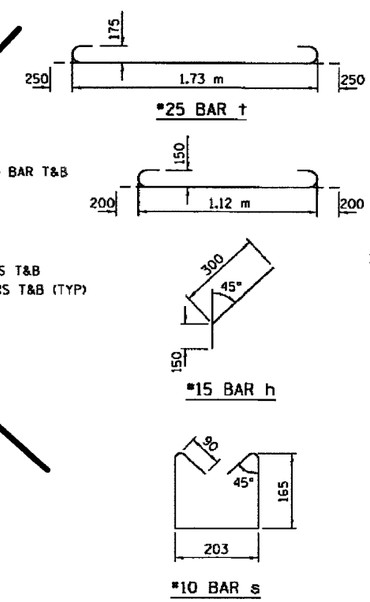

BAR DETAILS

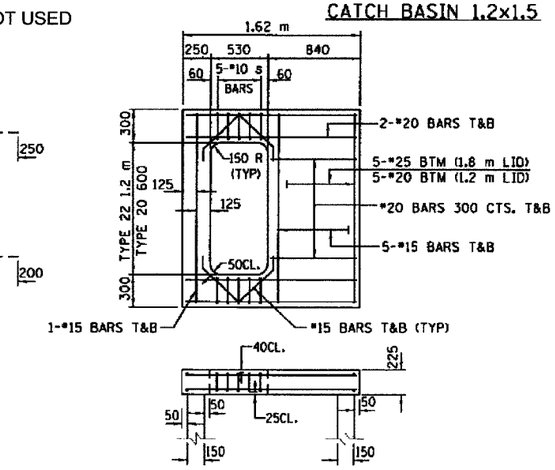

REINFORCED LID FOR
TYPE 20 AND 22 F&G

REVISIONS	
NAME	DATE
ACE	02/04

ILLINOIS DEPARTMENT OF TRANSPORTATION
F.A.I. ROUTE 80/94 (KINGERY EXPRESSWAY)

CATCH BASIN AND INLET
1.2 x 0.9 AND 1.2 x 1.5
FOR H ≤ 2.4

SCALE NONE DRAWN BY ACE/CAD
DATE 09/03 CHECKED BY

CS-7 (METRIC)
REVISION DATE:

F:\Project\2014\0080\DWG\Contract & Structure Information\Details\CS 7.dgn Thu Feb 26 07:02:54 2004