ALL DIMENSIONS IN METERS EXCEPT PAY ITEMS AND UNLESS NOTED OTHERWISE

F.A.I. RTE.	SECTION	COUNTY	TOTAL SHEETS	SHEET NO.
80/94	2626.2-R-1	COOK	452	107
STA.		TO STA.		
FED. ROAD DIST. NO.		ILLINOIS	FED. AID PROJECT	

CONTRACT NO. 62113 INDOT DES. NO. 0100987

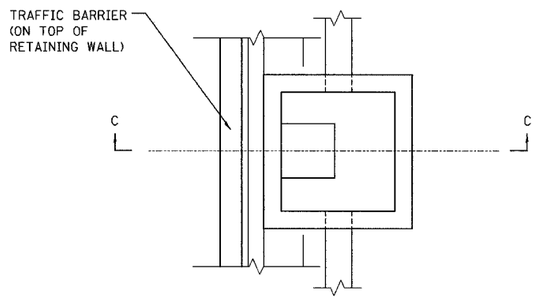

PLAN VIEW - CB 1.2X0.9 SPL T20F&G

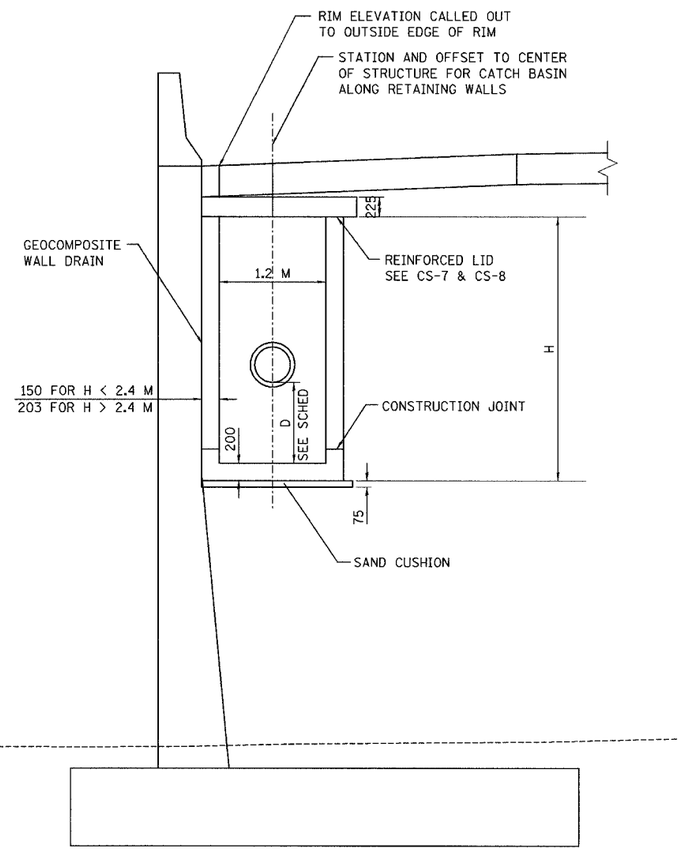

SECTION C-C
ELEVATION VIEW - CB 1.2X0.9 SPL T20F&G

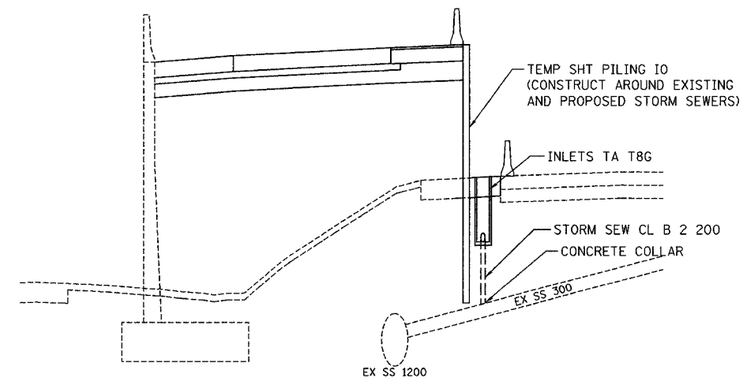

SECTION VIEW

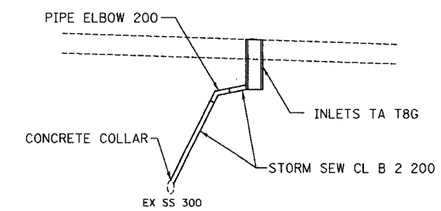

ELEVATION VIEW

DETAIL A
TEMPORARY DRAINAGE
STA 6+900 TO STA 7+275

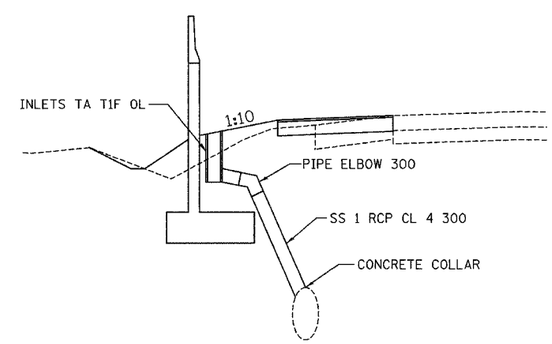

SECTION VIEW

DETAIL B
TEMPORARY DRAINAGE
STA 7+600 TO STA 7+900

REVISIONS	
NAME	DATE

ILLINOIS DEPARTMENT OF TRANSPORTATION
I-80/94/US 6
KINGERY-BORMAN EXPRESSWAY
BURNHAM ROAD TO US 41

DRAINAGE DETAILS

SCALE NONE DRAWN BY ACE/CAD
DATE 07/04 CHECKED BY TAE

AMERICAN CONSULTING ENGINEERS