F.A.I. RTE.	SECTION	COUNTY	TOTAL SHEETS	SHEET NO.
80/94	2626.2-R-1	COOK	452	87
STA.		TO STA.		
FED. ROAD DIST. NO.		ILLINOIS	FED. AID PROJECT	

CONTRACT NO. 62113 INDOT DES. NO. 0100987

TYPE I INLET FILTER

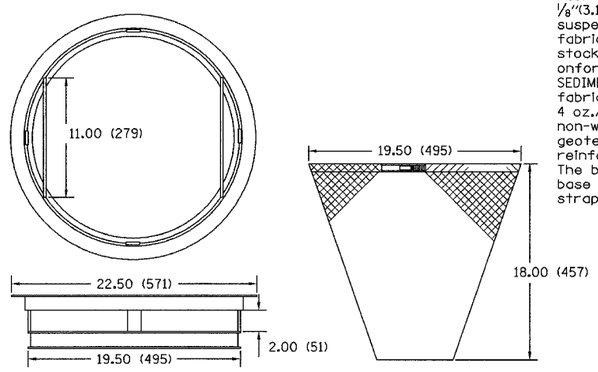

NOTES:
FRAME: Top ring shall be fabricated from 1 1/4"(31.7) x 1 1/4"(31.7) x 1/8"(3.1) angle. Base ring shall be fabricated from 1 1/2"(38.1) x 1/2"(12.7) x 1/8"(3.1) channel. Handles and suspension brackets shall be fabricated from 1 1/4"(31.7) x 1/4"(6.3) flat stock. Domestic steel c onforming to ASTM-A36.
SEDIMENT BAGS: Shall be fabricated from 4 oz./sq. yd.(0.142 L/SQ M) non-woven polypropylene geotextile and shall be reinforced with polyester mesh. The bag shall be secured to the base ring with a stainless steel strap and lock.

CATCH BASIN & INLET FILTER

(To be installed on buried structures while paving)

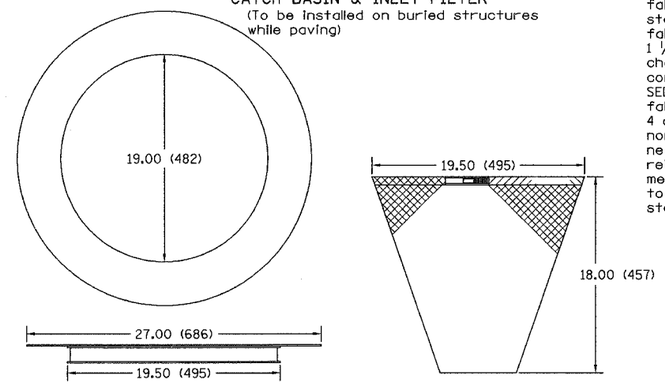

NOTES:
FRAME: Flange shall be fabricated from 1/8"(3.1) flat stock. Base ring shall be fabricated from 1 1/2"(38.1) x 1/2"(12.7) x 1/8"(3.1) channel. Domestic steel conforming to ASTM-A36.
SEDIMENT BAG: Shall be fabricated from 4 oz./sq. yd.(0.142 L/SQ M) non-woven polypropyle ne geotextile and shall be reinforced with polyester mesh. The bag shall be secured to the base ring with a stainless steel strap and lock.

TYPE 8 INLET FILTER

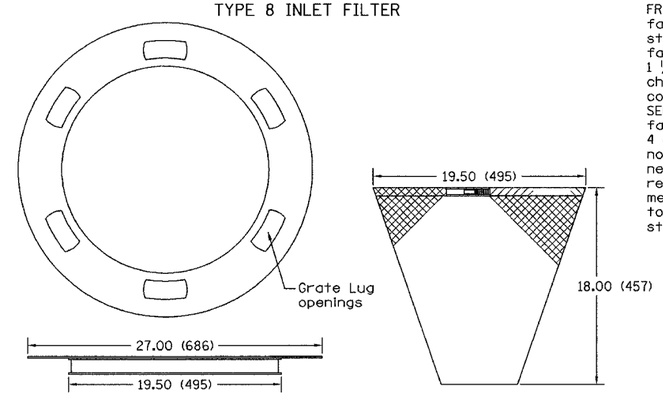

NOTES:
FRAME: Flange shall be fabricated from 1/8"(3.1) flat stock. Base ring shall be fabricated from 1 1/2"(38.1) x 1/2"(12.7) x 1/8"(3.1) channel. Domestic steel conforming to ASTM-A36.
SEDIMENT BAG: Shall be fabricated from 4 oz./sq. yd.(0.142 L/SQ M) non-woven polypropyle ne geotextile and shall be reinforced with polyester mesh. The bag shall be secured to the base ring with a stainless steel strap and lock.

NOTE: ALL UNITS ARE IN INCHES (MILLIMETERS) UNLESS OTHERWISE NOTED

REVISIONS	
NAME	DATE

ILLINOIS DEPARTMENT OF TRANSPORTATION

INLET FILTER DETAILS

SCALE NONE DRAWN BY
DATE CHECKED BY