ROUTE NO.	SECTION	COUNTY	TOTAL SHEETS	SHEET NO.
F.A.I. 80/94	2626.2-R-2	LAKE COUNTY, INDIANA	47592	60
		ILLINOIS	FED. AID PROJECT-	

SHEET NO. S- 1
1 SHEETS

CONTRACT NO. 62743 INDOT DES. NO. 0100987

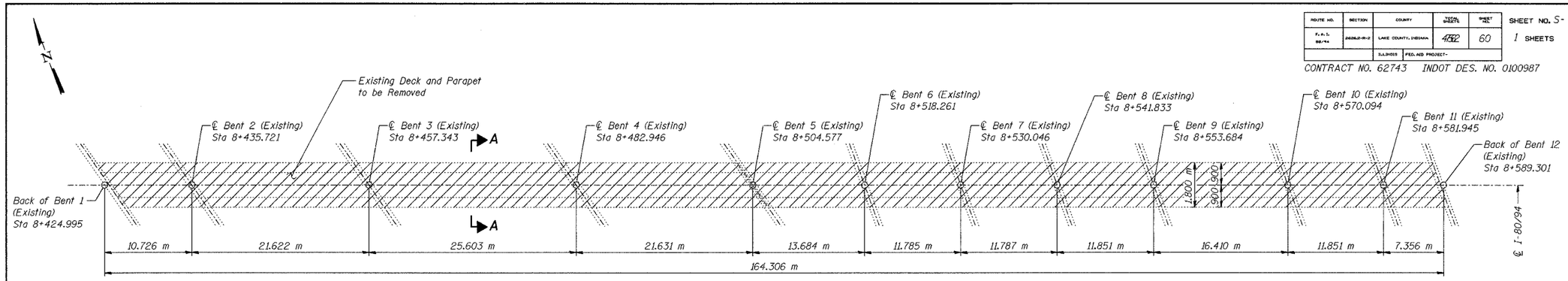

PLAN - CONCRETE REMOVAL

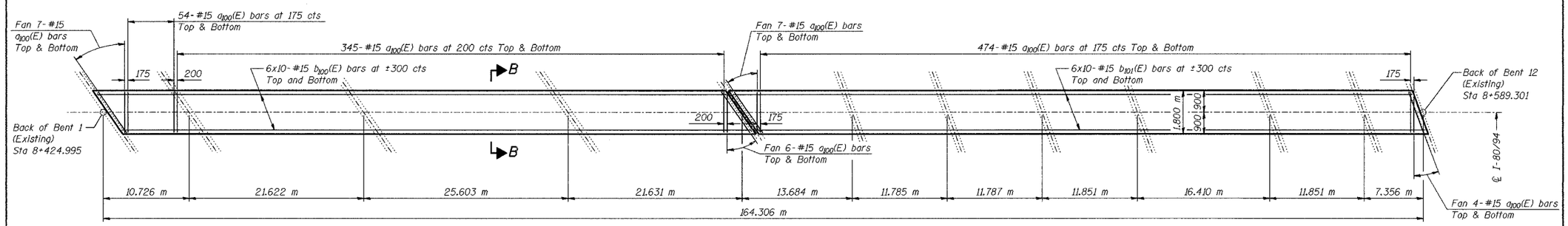

PLAN - CONCRETE REPLACEMENT

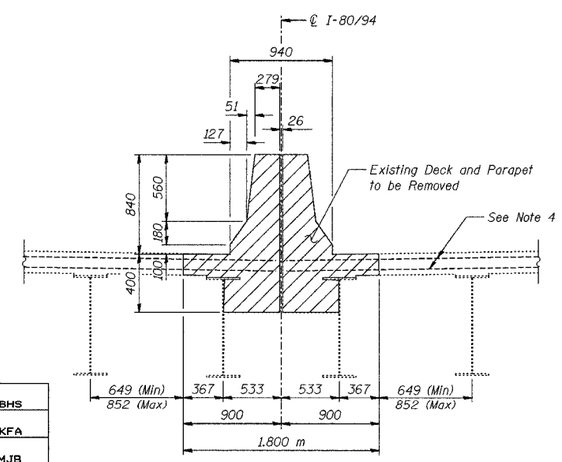

SECTION A-A

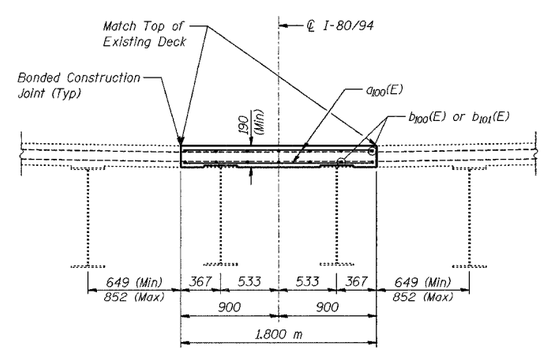

SECTION B-B

DESIGNED	BHS
CHECKED	KFA
DRAWN	MJB
CHECKED	GSP

BILL OF MATERIAL

Bar	No.	Size	Length (m)	Shape
a_{100}(E)	1,794	#15	1.70	———
b_{100}(E)	120	#15	8.52	———
b_{101}(E)	120	#15	9.04	———
Concrete Removal			m^3	186.5
Concrete Superstructure			m^3	56.2
Reinforcement Bars, Epoxy Coated			kg	8,100

MINIMUM BAR LAPS

#15 bars = 640

NOTES:

1. Reinforcement bars designated (E) shall be epoxy coated.
2. Bars indicated thus 20 x 3-#15 etc. indicates 20 lines of bars with 3 lengths per line.
3. All dimensions are in millimeters (mm) except as noted.
4. Existing transverse reinforcement extending into removal area shall be cleaned, straightened and incorporated into new construction. Cost included with "Concrete Removal".
5. Plan dimensions relative to existing structures are subject to nominal construction variations.

ILLINOIS DEPARTMENT OF TRANSPORTATION
F.A.I. ROUTE 80/94 (BORMAN EXPRESSWAY)
OVER LITTLE CALUMET RIVER & N.I.C.T.D. R.O.W.

DECK CLOSURE DEATAILS; LITTLE CALUMET
SECTION 2626.2-R-1
LAKE COUNTY, INDIANA
STATION 8+470.000
STRUCTURE NO. I-80-1-8460 (EB & WB)
(016-I003 & 016-I004)

DATE 07/04

AMERICAN CONSULTING ENGINEERS