F.A.I. RTE.	SECTION	COUNTY	TOTAL SHEETS	SHEET NO.
80/94	2626.2-R-1	COOK	452	53
STA.		TO STA.		
FED. ROAD DIST. NO.		ILLINOIS	FED. AID PROJECT	

CONTRACT NO. 62113 INDOT DES. NO. 0100987

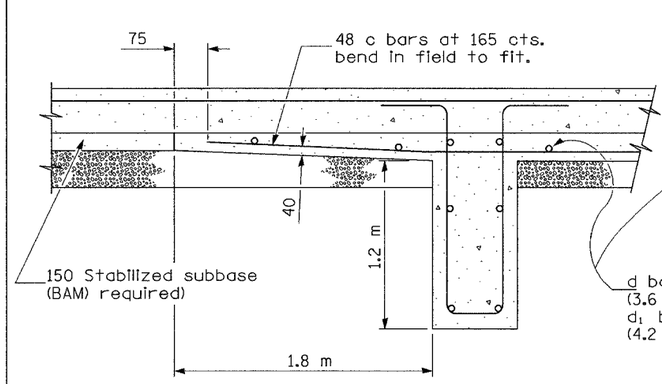

SECTION AT LUG W

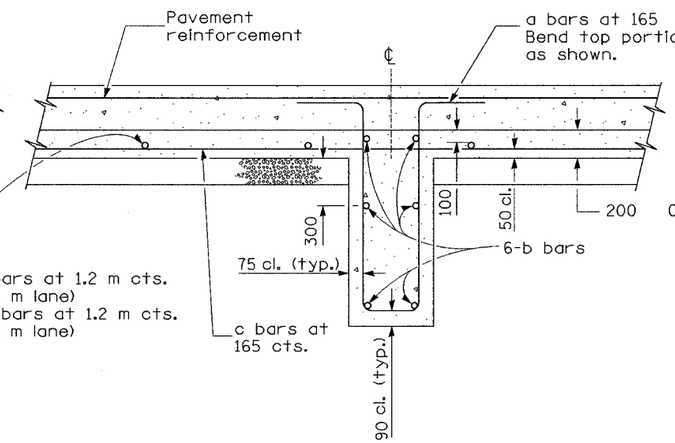

SECTION AT LUG X

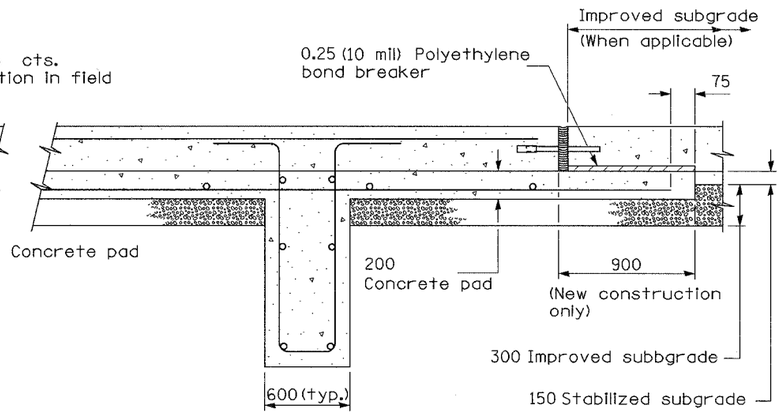

SECTION AT LUG Y

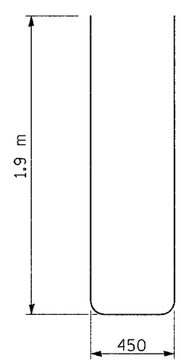

BAR a

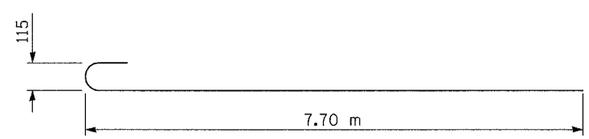

BAR b

MATERIALS REQUIRED FOR (1) ONE LUG SYSTEM

(Excluding Pavement Concrete and Pavement Reinforcement)

Bar	Qty.	Size	Length	Shape
a	144	No. 25	4.25 m	
b	18	No. 16	7.89 m	
c	144	No. 16	6.10 m	
d	14	No. 13	3.52 m	
d_1	14	No. 13	4.12 m	

Concrete, m^3	16.9
Reinforcing Bars, kg	4090
Concrete Pad, m^2	134
Improved Subgrade, m^2	131

All reinforcement shall be epoxy coated.

All dimensions are in millimeters unless otherwise shown.

(Sheet 2 of 2)

REVISIONS	
NAME	DATE

ILLINOIS DEPARTMENT OF TRANSPORTATION
I-80/94/US 6
KINGERY-BORMAN EXPRESSWAY
BURNHAM ROAD TO US 41

7.8 M CRC PAVEMENT
(WITH LUG SYSTEM)

SCALE NONE DRAWN BY ACE/CAD
DATE 07/04 CHECKED BY TAE

AMERICAN CONSULTING ENGINEERS