F.A.I. RTE.	SECTION	COUNTY	TOTAL SHEETS	SHEET NO.
80/94	2626.2-R-1	COOK	452	52
STA.		TO STA.		
FED. ROAD DIST. NO.		ILLINOIS	FED. AID PROJECT	

CONTRACT NO. 62113 INDOT DES. NO. 0100987

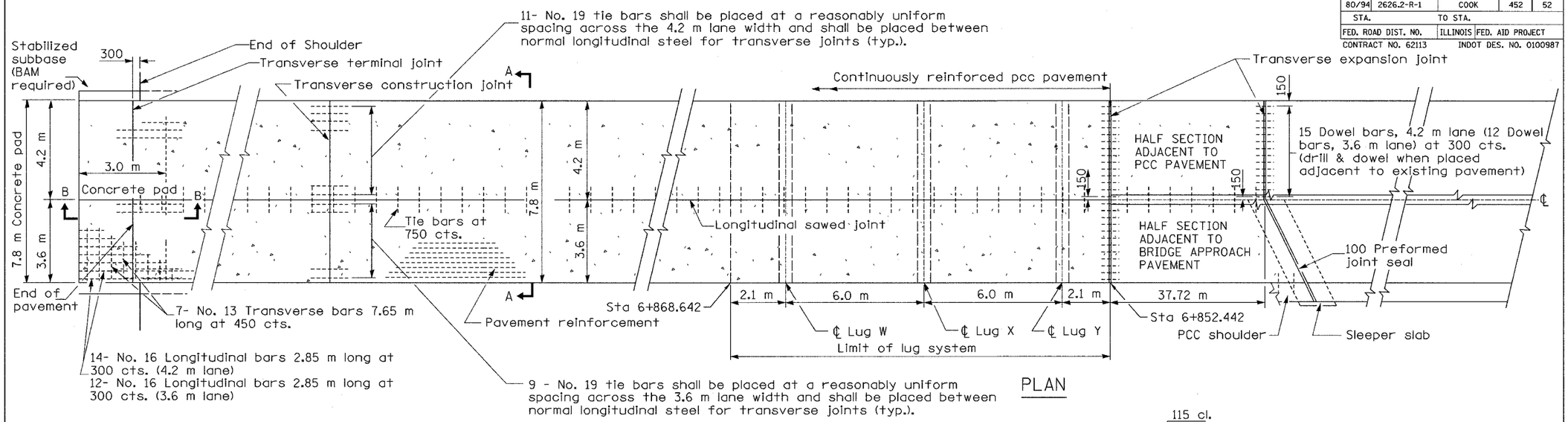

PLAN

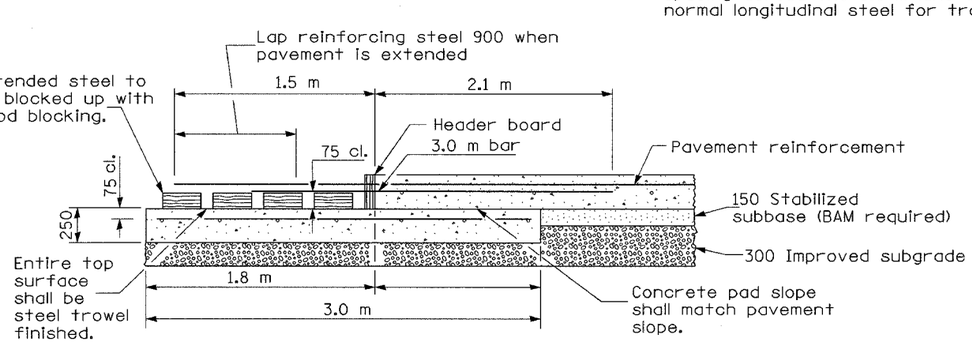

TRANSVERSE TERMINAL JOINT

SECTION B-B

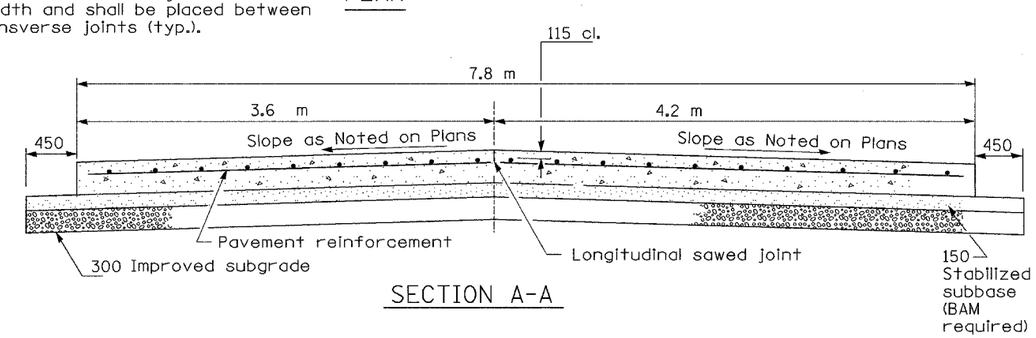

SECTION A-A

GENERAL NOTES

(See Detail for "Bar Reinforcement for 4.2 m CRC Pavement Reinforcement" for 4.2 m lane.

See Standard 421001 for details of pavement reinforcement for 3.6 m lane.

See Standards 420001 and 420401 for joint details not shown.

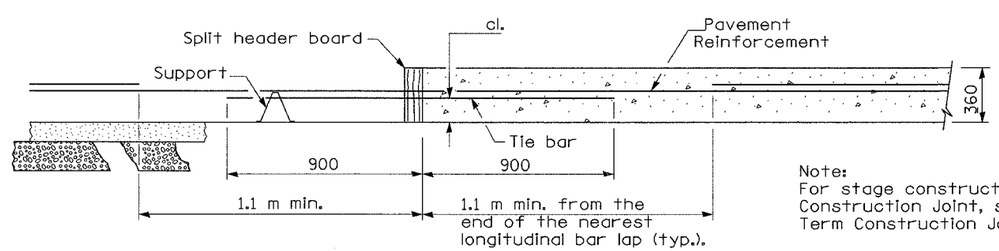

Note:
For stage construction of Transverse Construction Joint, see detail for Long Term Construction Joint Details.

TRANSVERSE CONSTRUCTION JOINT

All dimensions are in millimeters unless otherwise shown.

(Sheet 1 of 2)

REVISIONS	
NAME	DATE

ILLINOIS DEPARTMENT OF TRANSPORTATION
I-80/94/US 6
KINGERY-BORMAN EXPRESSWAY
BURNHAM ROAD TO US 41

7.8 M CRC PAVEMENT
(WITH LUG SYSTEM)

SCALE NONE DRAWN BY ACE/CAD
DATE 07/04 CHECKED BY TAE

AMERICAN CONSULTING ENGINEERS