Illinois Department of Transportation
2300 South Dirksen Parkway / Springfield, Illinois/62764

February 25, 2004

SUBJECT: FAP Route 614 (IL 78)
Project ACF-0614(023)
Section 147(RS-5,B-1,B-2)
Morgan & Cass Counties
Item No. 93, March 5, 2004 Letting
Addendum A

TO PROSPECTIVE BIDDERS:

In accordance with your request, we have sent you plans and a proposal for the subject improvement.

Enclosed herewith is one copy each of the following described material:

1. Revised pages 1, 2, 3, 5, 6, 7, 8 & 9 of the Schedule of Prices.

Prime contractors must utilize the enclosed material when preparing their bid and must include any Schedule of Prices changes in their bidding proposal. Bidders using computer generated bids are cautioned to reflect any and all Schedule of Prices changes, if involved, into their computer programs.

If proposal sheets are printed back to back, bidders are cautioned to exercise care when inserting revised and/or added special provisions into their proposals.

Please call 217/782-7806 if any of the above described material is not included in this transmittal.

Very truly yours,

Ted B. Walschleger, P.E.
Engineer of Project Development
and Implementation

cc: C. Reed; Roger Driskell; Jim White; Design & Environment File

MS/ds

If you plan to submit a bid directly to the Department of Transportation

PREQUALIFICATION

Any contractor who desires to become pre-qualified to bid on work advertised by IDOT must submit the properly completed pre-qualification forms to the Bureau of Construction no later that 4:30 p.m. prevailing time twenty-one days prior to the letting of interest. This pre-qualification requirement applies to first time contractors, contractors renewing expired ratings, contractors maintaining continuous pre-qualification or contractors requesting revised ratings. To be eligible to bid, existing pre-qualification ratings must be effective through the date of letting.

REQUESTS FOR AUTHORIZATION TO BID

Contractors receiving paper plans and/or proposals who are wanting to bid on items included in a particular letting must submit the properly completed "Request for Proposal Forms and Plans & Request for Authorization to Bid" (BDE 124) or Contractors downloading plans and/or proposals who are wanting to bid on items included in a particular letting must submit the properly completed "Request for Authorization to Bid/or Not For Bid Status" (BDE 124INT)and the ORIGINAL "Affidavit of Availability" (BC 57) to the proper office no later than 4:30 p.m. prevailing time, three (3) days prior to the letting date.

WHO CAN BID ?

Bids will be accepted from only those companies that request and receive written **Authorization to Bid** from IDOT's Central Bureau of Construction.

WHAT CONSTITUTES WRITTEN AUTHORIZATION TO BID?: When a prospective prime bidder submits a "Request for Proposal Forms and Plans"(BDE 124) or "Request for Authorization to Bid/or Not For Bid Status"(BDE 124INT) he/she must indicate at that time which items are being requested For Bidding purposes. Only those items requested For Bidding will be analyzed. After the request has been analyzed, the bidder will be issued a **Proposal Denial and/or Authorization Form**, approved by the Central Bureau of Construction, that indicates which items have been approved For Bidding. If **Authorization to Bid** cannot be approved, the **Proposal Denial and/or Authorization Form** will indicate the reason for denial.

ABOUT AUTHORIZATION TO BID: Firms that have not received an authorization form within a reasonable time of complete and correct original document submittal should contact the department as to status. This is critical in the week before the letting. These documents must be received three days before the letting date. Firms unsure as to authorization status should call the Prequalification Section of the Bureau of Construction at the number listed at the end of these instructions.

ADDENDA: It is the contractor's responsibility to determine which, if any, addenda pertains to any project they may be bidding. Failure to incorporate all relevant addenda may cause the bid to be declared unacceptable. When the Department implements electronic **ONLY** Plans and Proposals it will not send addenda to individual plan holders. Each addendum will be placed with the electronic Plan and/or Proposal. Addenda will also be placed on the Addendum Checklist and each subscription service subscriber will be notified by e-mail of each addendum issued. The Internet is the Department's primary way of doing business. The subscription server e-mails are an added courtesy the Department provides. It is suggested that bidder check IDOT's website www.dot.state.il.us before submitting final bid information.

IDOT is not responsible for any e-mail related failures.
Questions may be directed to Jim Duncan at 217-782-7806 or duncanjr@nt.dot.state.il.us.

WHAT MUST BE INCLUDED WHEN BIDS ARE SUBMITTED?: Bidders need not return the entire proposal when bids are submitted. That portion of the proposal that must be returned includes the following:

1. All documents from the Proposal Cover Sheet through the Proposal Bid Bond
2. Other special documentation and/or information that may be required by the contract special provisions

All proposal documents, including Proposal Guaranty Checks or Proposal Bid Bonds, should be stapled together to prevent loss when bids are processed by IDOT personnel.

ABOUT SUBMITTING BIDS: It is recommended that bidders deliver bids in person to insure they arrive at the proper location prior to the time specified for the receipt of bids. Any bid received at the place of letting after the time specified will not be accepted.

WHO SHOULD BE CALLED IF ASSISTANCE IS NEEDED?

Questions Regarding	Call
Prequalification and/or Authorization to Bid	217/782-3413
Preparation and submittal of bids	217/782-7806
Mailing of plans and proposals	217/782-7806
Electronic plans and proposals	217/785-5875

ADDENDUMS TO THE PROPOSAL FORMS

Planholders should verify that they have received and incorporated the revisions prior to submitting their bid. If plans/proposals were requested/downloaded prior to the date of the addendum, an addendum package should have been mailed to the planholder or updated electronically on IDOT's website. If plans/proposals were ordered/downloaded after the date of the addendum, the plans/proposal package should already include all revisions and an identifying addendum sheet immediately after the proposal cover sheet. Failure by the bidder to include an addendum could result in a bid being rejected as irregular. If a planholder has not received an addendum within 5 days after the addendum date noted, they should call 217-782-7806.

RETURN WITH BID

Proposal Submitted By Name
Address
City

93

Letting March 5, 2004

BIDDERS NEED NOT RETURN THE ENTIRE PROPOSAL
(See instructions inside front cover)

NOTICE TO PROSPECTIVE BIDDERS
This proposal can be used for bidding purposes by only those companies that request and receive written AUTHORIZATION TO BID from IDOT's Central Bureau of Construction.
(SEE INSTRUCTIONS ON THE INSIDE OF COVER)

Notice To Bidders, Specifications, Proposal, Contract and Contract Bond

Illinois Department of Transportation

Springfield, Illinois 62764

Contract No. 92656
MORGAN-CASS Counties
Section 147(RS-5,B-1,B-2)
Project ACF-614(23)
Route FAP 614
District 6 Construction Funds

PLEASE MARK THE APPROPRIATE BOX BELOW:

☐ A Bid Bond is included.

☐ A Cashier's Check or a Certified Check is included

Prepared by

Checked by F

(Printed by authority of the State of Illinois)

INSTRUCTIONS

ABOUT IDOT PROPOSALS: All proposals issued by IDOT are potential bidding proposals. Each proposal contains all Certifications and Affidavits, a Proposal Signature Sheet and a Proposal Bid Bond required for Prime Contractors to submit a bid after written **Authorization to Bid** has been issued by IDOT's Central Bureau of Construction.

HOW MANY PROPOSALS SHOULD PROSPECTIVE BIDDERS REQUEST?: Prospective bidders should, prior to submitting their initial request for plans and proposals, determine their needs and request the total number of plans and proposals needed for each item requested. There will be a nonrefundable charge of $15 for each set of plans and specifications issued.

WHO CAN BID?: Bids will be accepted from only those companies that request and receive written **Authorization to Bid** from IDOT's Central Bureau of Construction. To request authorization, a potential bidder must complete and submit Part B of the Request for Proposal Forms and Plans & Request for Authorization to Bid form (BDE 124) and submit an original Affidavit of Availability (BC 57).

WHAT CONSTITUTES WRITTEN AUTHORIZATION TO BID?: When a prospective prime bidder submits a "Request for Proposal Forms and Plans" he/she must indicate at that time which items are being requested For Bidding purposes. Only those items requested For Bidding will be analyzed. After the request has been analyzed, the bidder will be issued a **Proposal Denial and/or Authorization Form**, approved by the Central Bureau of Construction, that indicates which items have been approved For Bidding. If **Authorization to Bid** cannot be approved, the **Proposal Denial and/or Authorization Form** will indicate the reason for denial. If a contractor has requested to bid but has not received a **Proposal Denial and/or Authorization Form**, they should contact the Central Bureau of Construction in advance of the letting date.

WHAT MUST BE INCLUDED WHEN BIDS ARE SUBMITTED?: Bidders need not return the entire proposal when bids are submitted. That portion of the proposal that must be returned includes the following:

1. All documents from the Proposal Cover Sheet through the Proposal Bid Bond

2. Other special documentation and/or information that may be required by the contract special provisions

All proposal documents, including Proposal Guaranty Checks or Proposal Bid Bonds, should be stapled together to prevent loss when bids are processed by IDOT personnel.

ABOUT SUBMITTING BIDS: It is recommended that bidders deliver bids in person to insure they arrive at the proper location prior to the time specified for the receipt of bids. Any bid received at the place of letting after the time specified will not be accepted.

WHO SHOULD BE CALLED IF ASSISTANCE IS NEEDED?

Questions Regarding	Call
Prequalification and/or Authorization to Bid	217/782-3413
Preparation and submittal of bids	217/782-7806
Mailing of plans and proposals	217/782-7806

RETURN WITH BID

Illinois Department of Transportation

PROPOSAL

TO THE DEPARTMENT OF TRANSPORTATION

1. Proposal of _____

   _____

   for the improvement identified and advertised for bids in the Invitation for Bids as:

   Contract No. 92656
   MORGAN-CASS Counties
   Section 147(RS-5,B-1,B-2)
   Project ACF-614(23)
   Route FAP 614
   District 6 Construction Funds

8.32 km of pavement patching, bituminous surface removal, 7.3 m and variable width bituminous concrete resurfacing, pavement removal, bituminous shoulders and aggregate shoulders on IL Route 78 from Snake Creek located approximately 3 miles north of Jacksonville extending north to just north of the Cass County Line. Also included is the construction of a single span, 1 @ 18.8 m, precast prestressed concrete I-beam bridge over a Fork of Indian Creek and a single span, 1 @ 30.0 m, precast prestressed concrete I-beam bridge over Little Indian Creek.

2. The undersigned bidder will furnish all labor, material and equipment to complete the above described project in a good and workmanlike manner as provided in the contract documents provided by the Department of Transportation. This proposal will become part of the contract and the terms and conditions contained in the contract documents shall govern performance and payments.

3. **ASSURANCE OF EXAMINATION AND INSPECTION/WAIVER.** The undersigned further declares that he/she has carefully examined the proposal, plans, specifications, form of contract and contract bond, and special provisions, and that he/she has inspected in detail the site of the proposed work, and that he/she has familiarized themselves with all of the local conditions affecting the contract and the detailed requirements of construction, and understands that in making this proposal he/she waives all right to plead any misunderstanding regarding the same.

4. **EXECUTION OF CONTRACT AND CONTRACT BOND.** The undersigned further agrees to execute a contract for this work and present the same to the department within fifteen (15) days after the contract has been mailed to him/her. The undersigned further agrees that he/she and his/her surety will execute and present within fifteen (15) days after the contract has been mailed to him/her contract bond satisfactory to and in the form prescribed by the Department of Transportation, in the penal sum of the full amount of the contract, guaranteeing the faithful performance of the work in accordance with the terms of the contract.

5. **PROPOSAL GUARANTY.** Accompanying this proposal is either a bid bond on the department form, executed by a corporate surety company satisfactory to the department, or a proposal guaranty check consisting of a bank cashier's check or a properly certified check for not less than 5 per cent of the amount bid or for the amount specified in the following schedule:

Amount of Bid			Proposal Guaranty	Amount of Bid			Proposal Guaranty
Up to		$5,000	$150	$2,000,000	to	$3,000,000	$100,000
$5,000	to	$10,000	$300	$3,000,000	to	$5,000,000	$150,000
$10,000	to	$50,000	$1,000	$5,000,000	to	$7,500,000	$250,000
$50,000	to	$100,000	$3,000	$7,500,000	to	$10,000,000	$400,000
$100,000	to	$150,000	$5,000	$10,000,000	to	$15,000,000	$500,000
$150,000	to	$250,000	$7,500	$15,000,000	to	$20,000,000	$600,000
$250,000	to	$500,000	$12,500	$20,000,000	to	$25,000,000	$700,000
$500,000	to	$1,000,000	$25,000	$25,000,000	to	$30,000,000	$800,000
$1,000,000	to	$1,500,000	$50,000	$30,000,000	to	$35,000,000	$900,000
$1,500,000	to	$2,000,000	$75,000	over		$35,000,000	$1,000,000

Bank cashier's checks or properly certified checks accompanying proposals shall be made payable to the Treasurer, State of Illinois, when the state is awarding authority; the county treasurer, when a county is the awarding authority; or the city, village, or town treasurer, when a city, village, or town is the awarding authority.

If a combination bid is submitted, the proposal guaranties which accompany the individual proposals making up the combination will be considered as also covering the combination bid.

The amount of the proposal guaranty check is _____ $( ). If this proposal is accepted and the undersigned shall fail to execute a contract bond as required herein, it is hereby agreed that the amount of the proposal guaranty shall become the property of the State of Illinois, and shall be considered as payment of damages due to delay and other causes suffered by the State because of the failure to execute said contract and contract bond; otherwise, the bid bond shall become void or the proposal guaranty check shall be returned to the undersigned.

Attach Cashier's Check or Certified Check Here

In the event that one proposal guaranty check is intended to cover two or more proposals, the amount must be equal to the sum of the proposal guaranties which would be required for each individual proposal. If the guaranty check is placed in another proposal, state below where it may be found.

The proposal guaranty check will be found in the proposal for: Item _____

Section No. _____

County _____

Mark the proposal cover sheet as to the type of proposal guaranty submitted.

BD 354 (Rev. 11/2001)

6. **COMBINATION BIDS.** The undersigned further agrees that if awarded the contract for the sections contained in the following combination, he/she will perform the work in accordance with the requirements of each individual proposal comprising the combination bid specified in the schedule below, and that the combination bid shall be prorated against each section in proportion to the bid submitted for the same. If an error is found to exist in the gross sum bid for one or more of the individual sections included in a combination, the combination bid shall be corrected as provided in the specifications.

When a combination bid is submitted, the schedule below must be completed in each proposal comprising the combination.

If alternate bids are submitted for one or more of the sections comprising the combination, a combination bid must be submitted for each alternate.

Schedule of Combination Bids

Combination No.	Sections Included in Combination	Combination Bid Dollars	Cents

7. **SCHEDULE OF PRICES.** The undersigned bidder submits herewith, in accordance with the rules and instructions, a schedule of prices for the items of work for which bids are sought. The unit prices bid are in U.S. dollars and cents, and all extensions and summations have been made. The bidder understands that the quantities appearing in the bid schedule are approximate and are provided for the purpose of obtaining a gross sum for the comparison of bids. If there is an error in the extension of the unit prices, the unit prices shall govern. Payment to the contractor awarded the contract will be made only for actual quantities of work performed and accepted or materials furnished according to the contract. The scheduled quantities of work to be done and materials to be furnished may be increased, decreased or omitted as provided elsewhere in the contract.

8. **CERTIFICATE OF AUTHORITY.** The undersigned bidder, if a business organized under the laws of another State, assures the Department that it will furnish a copy of its certificate of authority to do business in the State of Illinois with the return of the executed contract and bond. Failure to furnish the certificate within the time provided for execution of an awarded contract may be cause for cancellation of the award and forfeiture of the proposal guaranty to the State.

ILLINOIS DEPARTMENT OF TRANSPORTATION
SCHEDULE OF PRICES
CONTRACT NUMBER - 92656

State Job # - C-96-544-04
PPS NBR - 6-06930-0100
County Name - CASS- MORGAN-
Code - 17 - 137 -
District - 6 - 6 -
Section Number - 147(RS-5, B-1, B-2)

Project Number: ACF-0614/023/000

Route: FAP 614

Item Number	Pay Item Description	Unit of Measure	Quantity	x	Unit Price	=	Total Price
LR631020	TRAF BAR TERM T1	EACH	2.000				
MX032591	PIPE DRAIN REMOVAL	METER	27.000				
MX032659	BIT CONC BC SUPERPAVE	M TON	2,056.000				
MX033276	TEMP SOIL RETEN SYSTM	SQ M	72.000				
MX033317	AGG SUBGRADE	M TON	700.000				
MX281014	STN DMP RIP/C SL CLA4	SQ M	524.000				
MX355300	BIT BC SUPER 300	SQ M	4,364.000				
* MX356395	BC BC WIDE SUPER 225	SQ M	5,108.000				
* MX406M15	LEV BIND MM SUPER N50	M TON	2,611.000				
MX406012	BC SC SUPER "C" N50	M TON	5,741.000				
MX408040	INCID BIT SUR SUPER	M TON	1,001.000				
MX482330	BIT SHLD SUPER 200	SQ M	947.000				
* MZ054517	ROCK FILL - FOUNDATN	M TON	273.000				
M2010110	TREE REMOV 6-15	UNIT	34.000				
M2010500	TREE REMOV HECTARES	HA	5.000				
		* REVISED : FEBRUARY 24, 2004					

ILLINOIS DEPARTMENT OF TRANSPORTATION
SCHEDULE OF PRICES
CONTRACT NUMBER - 92656

State Job # - C-96-544-04
PPS NBR - 6-06930-0100
County Name - CASS- MORGAN-
Code - 17 - 137 -
District - 6 - 6 -
Section Number - 147(RS-5, B-1, B-2)

Project Number: ACF-0614/023/000

Route: FAP 614

Item Number	Pay Item Description	Unit of Measure	Quantity	x	Unit Price	=	Total Price
* M2020010	EARTH EXCAVATION	CU M	65,151.000				
M2020030	EARTH EXC - EROS CONT	CU M	100.000				
* M2020050	EARTH EXC WID	CU M	1,149.000				
M2030100	CHANNEL EXCAV	CU M	7,426.000				
M2070220	POROUS GRAN EMBANK	CU M	310.000				
M2112500	TOPSOIL EXC & PLAC	CU M	2,323.000				
M2130103	EXPLOR TRENCH 1.3	METER	181.000				
* M2500200	SEEDING CL 2	HA	7.500				
* M2500350	SEEDING CL 7	HA	7.500				
M2500400	NITROGEN FERT NUTR	KG	750.000				
M2500500	PHOSPHORUS FERT NUTR	KG	750.000				
M2500600	POTASSIUM FERT NUTR	KG	750.000				
M2500700	AGR GROUND LIMESTONE	M TON	34.000				
* M2510105	MULCH METHOD 1	HA	7.500				
* M2510115	MULCH METHOD 2	HA	7.500				
		* REVISED : FEBRUARY 24, 2004					

ILLINOIS DEPARTMENT OF TRANSPORTATION
SCHEDULE OF PRICES
CONTRACT NUMBER - 92656

State Job # - C-96-544-04
PPS NBR - 6-06930-0100
County Name - CASS- MORGAN-
Code - 17 - 137 -
District - 6 - 6 -
Section Number - 147(RS-5, B-1, B-2)

Project Number: ACF-0614/023/000

Route: FAP 614

Item Number	Pay Item Description	Unit of Measure	Quantity	x	Unit Price	=	Total Price
* M2511005	HD EXCELSIOR BLANKET	SQ M	500.000				
* M2800400	PERIMETER EROS BAR	METER	140.000				
* M2801000	AGGREGATE - EROS CONT	M TON	300.000				
* M2810209	STONE RIPRAP CL A5	M TON	1,498.000				
* M2810807	STONE DUMP RIP CL A4	M TON	1,812.000				
* M2810809	STONE DUMP RIP CL A5	M TON	4,499.000				
M2810825	STONE DUMP RIP CL B3	M TON	24.000				
* M2820100	FILTER FAB FOR RIPRAP	SQ M	9,952.000				
* DELETED							
M3020300	PROC LIME MD SOIL 300	SQ M	5,344.000				
M3021400	WATER	UNIT	169.000				
M3021500	LIME	M TON	123.000				
M3580100	PREPARATION OF BASE	SQ M	2,165.000				
M3580200	AGG BASE REPAIR	M TON	33.400				
M4021010	AGG SURF CSE B	M TON	681.000				
		* REVISED : FEBRUARY 24, 2004					

ILLINOIS DEPARTMENT OF TRANSPORTATION
SCHEDULE OF PRICES
CONTRACT NUMBER - 92656

State Job # - C-96-544-04
PPS NBR - 6-06930-0100
County Name - CASS- MORGAN-
Code - 17 - 137 -
District - 6 - 6 -
Section Number - 147(RS-5, B-1, B-2)

Project Number: ACF-0614/023/000

Route: FAP 614

Item Number	Pay Item Description	Unit of Measure	Quantity	x	Unit Price	=	Total Price
M4060200	BIT MATLS PR CT	M TON	28.400				
M4060300	AGG PR CT	M TON	133.700				
M4060895	CONSTRUC TEST STRIP	EACH	3.000				
M4060980	BIT SURF REM BUTT JT	SQ M	121.000				
M4060990	TEMPORARY RAMP	SQ M	144.000				
M4205000	BR APPR PAVT	SQ M	367.000				
M4206200	BR APPR PVT CON (FLX)	SQ M	37.000				
M4401000	BIT SURF REM VAR DP	SQ M	52,475.000				
M4402000	PAVEMENT REM	SQ M	2,523.000				
M4402030	GUTTER REM	METER	1,687.000				
M4402080	BIT BASE CSE REMOV	SQ M	881.000				
M4402350	GUT OUTLET REM	METER	11.000				
M4422350	PAVT PATCH T2 350	SQ M	700.000				
M4423350	PAVT PATCH T3 350	SQ M	100.000				
M4430020	STRIP REF CR CON TR	METER	16,274.000				

ILLINOIS DEPARTMENT OF TRANSPORTATION
SCHEDULE OF PRICES
CONTRACT NUMBER - 92656

State Job # - C-96-544-04
PPS NBR - 6-06930-0100
County Name - CASS- MORGAN-
Code - 17 - 137 -
District - 6 - 6 -
Section Number - 147(RS-5, B-1, B-2)

Project Number: ACF-0614/023/000

Route: FAP 614

Item Number	Pay Item Description	Unit of Measure	Quantity	x	Unit Price	=	Total Price
M4812000	AGGREGATE SHLDS B	M TON	1,503.000				
M4822000	BIT SHOULDERS SUPER	M TON	116.000				
* DELETED							
M5010521	REM EXIST CULVERTS	METER	8.000				
M5020100	STRUCTURE EXCAVATION	CU M	391.000				
M5030350	CONC STRUCT	CU M	54.000				
M5030360	CONC SUP-STR	CU M	177.000				
M5030390	BR DECK GROOVING	SQ M	469.000				
M5030450	PROTECTIVE COAT	SQ M	579.000				
M5040914	F&E P P CON I-BM 914	METER	110.000				
M5041372	F&E P P CON I-BM 1372	METER	176.500				
M5080105	REINFORCEMENT BARS	KG	31,270.000				
M5080205	REINF BARS, EPOXY CTD	KG	25,190.000				
M5120160	F STL PILE HP310X79	METER	132.000				
M5120166	F STL PILE HP310X94	METER	155.000				
		* REVISED : FEBRUARY 24, 2004					

ILLINOIS DEPARTMENT OF TRANSPORTATION
SCHEDULE OF PRICES
CONTRACT NUMBER - 92656

State Job # - C-96-544-04
PPS NBR - 6-06930-0100
County Name - CASS- MORGAN-
Code - 17 - 137 -
District - 6 - 6 -
Section Number - 147(RS-5, B-1, B-2)

Project Number: ACF-0614/023/000

Route: FAP 614

Item Number	Pay Item Description	Unit of Measure	Quantity	x	Unit Price	=	Total Price
M5120315	DRIVE STL PILE	METER	287.000				
M5120460	TEST PIL ST HP310X79	EACH	1.000				
M5120466	TEST PIL ST HP310X94	EACH	2.000				
* M5403000	CONC BOX CUL	CU M	311.100				
M542E136	PRC FL-END SEC 750	EACH	2.000				
M542F012	MET END SEC 300	EACH	6.000				
M542F244	CIP RC END SEC 900	EACH	2.000				
M5421415	P CUL 1 CS/A CP 375	METER	21.000				
M5423435	P CUL 2 RCCP 750	METER	12.000				
M5423445	P CUL 2 RCCP 900	METER	16.000				
M5423610	P CUL 2 CS/A CP 375	METER	38.000				
M5423615	P CUL 2 CS/A CP 450	METER	117.000				
M5429910	CONCRETE COLLAR	CU M	1.300				
M6010425	PIPE DRNS CS/AA 300	METER	15.000				
M6060010	CLASS SI CONC OUTLET	CU M	64.000				
		* REVISED : FEBRUARY 24, 2004					

ILLINOIS DEPARTMENT OF TRANSPORTATION
SCHEDULE OF PRICES
CONTRACT NUMBER - 92656

State Job # - C-96-544-04
PPS NBR - 6-06930-0100
County Name - CASS- MORGAN-
Code - 17 - 137 -
District - 6 - 6 -
Section Number - 147(RS-5, B-1, B-2)

Project Number: ACF-0614/023/000
Route: FAP 614

Item Number	Pay Item Description	Unit of Measure	Quantity	x	Unit Price	=	Total Price
M6060270	CONC GUTTER TA MOD	METER	238.000				
M6300100	SPBGR TY A	METER	572.000				
M6320030	GUARDRAIL REMOV	METER	698.000				
M7030100	SHORT-TERM PAVT MKING	METER	2,942.000				
M7030230	TEMP PVT MK LINE 125	METER	26,740.000				
M7031000	WORK ZONE PAVT MK REM	SQ M	77.000				
* M7040100	TEMP CONC BARRIER	METER	622.000				
* M7040200	REL TEMP CONC BARRIER	METER	228.000				
M7800210	PAINT PVT MK LN 125	METER	26,740.000				
XX004350	TRANSVERSE DRAINS COM	EACH	2.000				
* Z0002600	BAR SPLICERS	EACH	447.000				
Z0013798	CONSTRUCTION LAYOUT	L SUM	1.000				
* Z0030250	IMP ATTN TEMP NRD TL3	EACH	6.000				
* Z0030350	IMP ATTN REL NRD TL3	EACH	4.000				
28000300	TEMP DITCH CHECKS	EACH	5.000				
		* REVISED : FEBRUARY 24, 2004					

ILLINOIS DEPARTMENT OF TRANSPORTATION
SCHEDULE OF PRICES
CONTRACT NUMBER - 92656

State Job # - C-96-544-04
PPS NBR - 6-06930-0100
County Name - CASS- MORGAN-
Code - 17 - 137 -
District - 6 - 6 -
Section Number - 147(RS-5, B-1, B-2)

Project Number: ACF-0614/023/000

Route: FAP 614

Item Number	Pay Item Description	Unit of Measure	Quantity	x	Unit Price	=	Total Price
28000500	INLET & PIPE PROTECT	EACH	6.000				
* 50100100	REM EXIST STRUCT	EACH	2.000				
50300100	FLOOR DRAINS	EACH	20.000				
51500100	NAME PLATES	EACH	3.000				
60500060	REMOV INLETS	EACH	7.000				
60900140	TY B INLET BOX 609006	EACH	6.000				
60900515	CONC THRUST BLOCKS	EACH	6.000				
63100085	TRAF BAR TERM T6	EACH	8.000				
63100167	TR BAR TRM T1 SPL TAN	EACH	12.000				
66600105	FUR ERECT ROW MARKERS	EACH	50.000				
66700205	PERM SURV MKRS T1	EACH	9.000				
67000400	ENGR FIELD OFFICE A	CAL MO	12.000				
67100100	MOBILIZATION	L SUM	1.000				
70100200	TRAF CONT-PROT 701331	EACH	1.000				
* 70100405	TRAF CONT-PROT 701321	EACH	2.000				
		* REVISED : FEBRUARY 24, 2004					

ILLINOIS DEPARTMENT OF TRANSPORTATION
SCHEDULE OF PRICES
CONTRACT NUMBER - 92656

State Job # - C-96-544-04
PPS NBR - 6-06930-0100
County Name - CASS- MORGAN-
Code - 17 - 137 -
District - 6 - 6 -
Section Number - 147(RS-5, B-1, B-2)

Project Number: ACF-0614/023/000

Route: FAP 614

Item Number	Pay Item Description	Unit of Measure	Quantity	x	Unit Price	=	Total Price
70100450	TRAF CONT-PROT 701201	L SUM	1.000				
70100460	TRAF CONT-PROT 701306	L SUM	1.000				
70100500	TRAF CONT-PROT 701326	L SUM	1.000				
70101830	TRAF CONT-PROT BLR 21	L SUM	1.000				
70101835	TRAF CONT-PROT BLR 22	L SUM	1.000				
70103815	TR CONT SURVEILLANCE	CAL DA	40.000				
* 70106500	TEMP BR TRAF SIGNALS	EACH	2.000				
78100100	RAISED REFL PAVT MKR	EACH	347.000				
78200410	GUARDRAIL MKR TYPE A	EACH	37.000				
78200520	BAR WALL MKR TYPE B	EACH	4.000				
78201000	TERMINAL MARKER - DA	EACH	12.000				
		* REVISED : FEBRUARY 24, 2004					

CONTRACT NUMBER 92656

THIS IS THE TOTAL BID $ _____

NOTES:

1. **Each PAY ITEM should have a UNIT PRICE and a TOTAL PRICE.**
2. **The UNIT PRICE shall govern if no TOTAL PRICE is shown or if there is a discrepancy between the product of the UNIT PRICE multiplied by the QUANTITY.**
3. **If a UNIT PRICE is omitted, the TOTAL PRICE will be divided by the QUANTITY in order to establish a UNIT PRICE.**
4. **A bid may be declared UNACCEPTABLE if neither a unit price nor a total price is shown.**

RETURN WITH BID

STATE REQUIRED ETHICAL STANDARDS GOVERNING CONTRACT PROCUREMENT: ASSURANCES, CERTIFICATIONS AND DISCLOSURES

I. GENERAL

A. Article 50 of the Illinois Procurement Code establishes the duty of all State chief procurement officers, State purchasing officers, and their designees to maximize the value of the expenditure of public moneys in procuring goods, services, and contracts for the State of Illinois and to act in a manner that maintains the integrity and public trust of State government. In discharging this duty, they are charged by law to use all available information, reasonable efforts, and reasonable actions to protect, safeguard, and maintain the procurement process of the State of Illinois.

B. In order to comply with the provisions of Article 50 and to carry out the duty established therein, all bidders are to adhere to ethical standards established for the procurement process, and to make such assurances, disclosures and certifications required by law. By execution of the Proposal Signature Sheet, the bidder indicates that each of the mandated assurances has been read and understood, that each certification is made and understood, and that each disclosure requirement has been understood and completed.

C. In addition to all other remedies provided by law, failure to comply with any assurance, failure to make any disclosure or the making of a false certification shall be grounds for termination of the contract and the suspension or debarment of the bidder.

II. ASSURANCES

A. The assurances hereinafter made by the bidder are each a material representation of fact upon which reliance is placed should the Department enter into the contract with the bidder. The Department may terminate the contract if it is later determined that the bidder rendered a false or erroneous assurance, and the surety providing the performance bond shall be responsible for the completion of the contract.

B. Felons

1. The Illinois Procurement Code provides:

Section 50-10. Felons. Unless otherwise provided, no person or business convicted of a felony shall do business with the State of Illinois or any state agency from the date of conviction until 5 years after the date of completion of the sentence for that felony, unless no person held responsible by a prosecutorial office for the facts upon which the conviction was based continues to have any involvement with the business.

2. The bidder assures the Department that the award and execution of the contract would not cause a violation of Section 50-10.

C. Conflicts of Interest

1. The Illinois Procurement Code provides in pertinent part:

Section 50-13. Conflicts of Interest.

(a) Prohibition. It is unlawful for any person holding an elective office in this State, holding a seat in the General Assembly, or appointed to or employed in any of the offices or agencies of state government and who receives compensation for such employment in excess of 60% of the salary of the Governor of the State of Illinois, or who is an officer or employee of the Capital Development Board or the Illinois Toll Highway Authority, or who is the spouse or minor child of any such person to have or acquire any contract, or any direct pecuniary interest in any contract therein, whether for stationery, printing, paper, or any services, materials, or supplies, that will be wholly or partially satisfied by the payment of funds appropriated by the General Assembly of the State of Illinois or in any contract of the Capital Development Board or the Illinois Toll Highway authority.

(b) Interests. It is unlawful for any firm, partnership, association or corporation, in which any person listed in subsection (a) is entitled to receive (i) more than 7 1/2% of the total distributable income or (ii) an amount in excess of the salary of the Governor, to have or acquire any such contract or direct pecuniary interest therein.

(c) Combined interests. It is unlawful for any firm, partnership, association, or corporation, in which any person listed in subsection (a) together with his or her spouse or minor children is entitled to receive (i) more than 15%, in the aggregate, of the total distributable income or (ii) an amount in excess of 2 times the salary of the Governor, to have or acquire any such contract or direct pecuniary interest therein.

(d) Securities. Nothing in this Section invalidates the provisions of any bond or other security previously offered or to be offered for sale or sold by or for the State of Illinois.

(e) Prior interests. This Section does not affect the validity of any contract made between the State and an officer or employee of the State or member of the General Assembly, his or her spouse, minor child or any combination of those persons if that contract was in existence before his or her election or employment as an officer, member, or employee. The contract is voidable, however, if it cannot be completed within 365 days after the officer, member, or employee takes office or is employed.

The current salary of the Governor is $150,700.00. Sixty percent of the salary is $90,420.00.

2. The bidder assures the Department that the award and execution of the contract would not cause a violation of Section 50-13, or that an effective exemption has been issued by the Board of Ethics to any individual subject to the Section 50-13 prohibitions pursuant to the provisions of Section 50-20 of the Code and Executive Order Number 3 (1998). Information concerning the exemption process is available from the Department upon request.

D. Negotiations

1. The Illinois Procurement Code provides in pertinent part:

Section 50-15. Negotiations.

(a) It is unlawful for any person employed in or on a continual contractual relationship with any of the offices or agencies of State government to participate in contract negotiations on behalf of that office or agency with any firm, partnership, association, or corporation with whom that person has a contract for future employment or is negotiating concerning possible future employment.

2. The bidder assures the Department that the award and execution of the contract would not cause a violation of Section 50-15, and that the bidder has no knowledge of any facts relevant to the kinds of acts prohibited therein.

E. Inducements

1. The Illinois Procurement Code provides:

Section 50-25. Inducement. Any person who offers or pays any money or other valuable thing to any person to induce him or her not to bid for a State contract or as recompense for not having bid on a State contract is guilty of a Class 4 felony. Any person who accepts any money or other valuable thing for not bidding for a State contract or who withholds a bid in consideration of the promise for the payment of money or other valuable thing is guilty of a Class 4 felony.

2. The bidder assures the Department that the award and execution of the contract would not cause a violation of Section 50-25, and that the bidder has no knowledge of any facts relevant to the kinds of acts prohibited therein.

F. Revolving Door Prohibition

1. The Illinois Procurement Code provides:

Section 50-30. Revolving door prohibition. Chief procurement officers, associate procurement officers, State purchasing officers, their designees whose principal duties are directly related to State procurement, and executive officers confirmed by the Senate are expressly prohibited for a period of 2 years after terminating an affected position from engaging in any procurement activity relating to the State agency most recently employing them in an affected position for a period of at least 6 months. The prohibition includes, but is not limited to: lobbying the procurement process; specifying; bidding; proposing bid, proposal, or contract documents; on their own behalf or on behalf of any firm, partnership, association, or corporation. This Section applies only to persons who terminate an affected position on or after January 15, 1999.

2. The bidder assures the Department that the award and execution of the contract would not cause a violation of Section 50-30, and that the bidder has no knowledge of any facts relevant to the kinds of acts prohibited therein.

G. Reporting Anticompetitive Practices

1. The Illinois Procurement Code provides:

Section 50-40. Reporting anticompetitive practices. When, for any reason, any vendor, bidder, contractor, chief procurement officer, State purchasing officer, designee, elected official, or State employee suspects collusion or other anticompetitive practice among any bidders, offerors, contractors, proposers, or employees of the State, a notice of the relevant facts shall be transmitted to the Attorney General and the chief procurement officer.

2. The bidder assures the Department that it has not failed to report any relevant facts concerning the practices addressed in Section 50-40 which may involve the contract for which the bid is submitted.

H. Confidentiality

1. The Illinois Procurement Code provides:

Section 50-45. Confidentiality. Any chief procurement officer, State purchasing officer, designee, or executive officer who willfully uses or allows the use of specifications, competitive bid documents, proprietary competitive information, proposals, contracts, or selection information to compromise the fairness or integrity of the procurement, bidding, or contract process shall be subject to immediate dismissal, regardless of the Personnel code, any contract, or any collective bargaining agreement, and may in addition be subject to criminal prosecution.

2. The bidder assures the Department that it has no knowledge of any fact relevant to the practices addressed in Section 50-45 which may involve the contract for which the bid is submitted.

RETURN WITH BID

I. Insider Information

1. The Illinois Procurement Act provides:

Section 50-50. Insider information. It is unlawful for any current or former elected or appointed State official or State employee to knowingly use confidential information available only by virtue of that office or employment for actual or anticipated gain for themselves or another person.

2. The bidder assures the Department that it has no knowledge of any facts relevant to the practices addressed in Section 50-50 which may involve the contract for which the bid is submitted.

III. CERTIFICATIONS

A. The certifications hereinafter made by the bidder are each a material representation of fact upon which reliance is placed should the Department enter into the contract with the bidder. The Department may terminate the contract if it is later determined that the bidder rendered a false or erroneous certification, and the surety providing the performance bond shall be responsible for completion of the contract.

B. Bribery

1. The Illinois Procurement Code provides:

Section 50-5. Bribery.

(a) Prohibition. No person or business shall be awarded a contract or subcontract under this Code who:

(1) has been convicted under the laws of Illinois or any other state of bribery or attempting to bribe an officer or employee of the State of Illinois or any other state in that officer's or employee's official capacity; or

(2) has made an admission of guilt of that conduct that is a matter of record but has not been prosecuted for that conduct.

(b) Businesses. No business shall be barred from contracting with any unit of State or local government as a result of a conviction under this Section of any employee or agent of the business if the employee or agent is no longer employed by the business and:

(1) the business has been finally adjudicated not guilty; or

(2) the business demonstrates to the governmental entity with which it seeks to contract, and that entity finds that the commission of the offense was not authorized, requested, commanded, or performed by a director, officer, or high managerial agent on behalf of the business as provided in paragraph (2) of subsection (a) of Section 5-4 of the Criminal Code of 1961.

(c) Conduct on behalf of business. For purposes of this Section, when an official, agent, or employee of a business committed the bribery or attempted bribery on behalf of the business and in accordance with the direction or authorization of a responsible official of the business, the business shall be chargeable with the conduct.

(d) Certification. Every bid submitted to and contract executed by the State shall contain a certification by the contractor that the contractor is not barred from being awarded a contract or subcontract under this Section. A contractor who makes a false statement, material to the certification, commits a Class 3 felony.

2. The bidder certifies that it is not barred from being awarded a contract under Section 50.5.

C. Educational Loan

1. Section 3 of the Educational Loan Default Act provides:

§ 3. No State agency shall contract with an individual for goods or services if that individual is in default, as defined in Section 2 of this Act, on an educational loan. Any contract used by any State agency shall include a statement certifying that the individual is not in default on an educational loan as provided in this Section.

2. The bidder, if an individual as opposed to a corporation, partnership or other form of business organization, certifies that the bidder is not in default on an educational loan as provided in Section 3 of the Act.

D. Bid-Rigging/Bid Rotating

1. Section 33E-11 of the Criminal Code of 1961 provides:

§ 33E-11. (a) Every bid submitted to and public contract executed pursuant to such bid by the State or a unit of local government shall contain a certification by the prime contractor that the prime contractor is not barred from contracting with any unit of State or local government as a result of a violation of either Section 33E-3 or 33E-4 of this Article. The State and units of local government shall provide the appropriate forms for such certification.

(b) A contractor who makes a false statement, material to the certification, commits a Class 3 felony.

A violation of Section 33E-3 would be represented by a conviction of the crime of bid-rigging which, in addition to Class 3 felony sentencing, provides that any person convicted of this offense or any similar offense of any state or the United States which contains the same elements as this offense shall be barred for 5 years from the date of conviction from contracting with any unit of State or local government. No corporation shall be barred from contracting with any unit of State or local government as a result of a conviction under this Section of any employee or agent of such corporation if the employee so convicted is no longer employed by the corporation and: (1) it has been finally adjudicated not guilty or (2) if it demonstrates to the governmental entity with which it seeks to contract and that entity finds that the commission of the offense was neither authorized, requested, commanded, nor performed by a director, officer or a high managerial agent in behalf of the corporation.

A violation of Section 33E-4 would be represented by a conviction of the crime of bid-rotating which, in addition to Class 2 felony sentencing, provides that any person convicted of this offense or any similar offense of any state or the United States which contains the same elements as this offense shall be permanently barred from contracting with any unit of State or local government. No corporation shall be barred from contracting with any unit of State or local government as a result of a conviction under this Section of any employee or agent of such corporation if the employee so convicted is no longer employed by the corporation and: (1) it has been finally adjudicated not guilty or (2) if it demonstrates to the governmental entity with which it seeks to contract and that entity finds that the commission of the offense was neither authorized, requested, commanded, nor performed by a director, officer or a high managerial agent in behalf of the corporation.

2. The bidder certifies that it is not barred from contracting with the Department by reason of a violation of either Section 33E-3 or Section 33E-4.

E. <u>International Anti-Boycott</u>

1. Section 5 of the International Anti-Boycott Certification Act provides:

§ 5. State contracts. Every contract entered into by the State of Illinois for the manufacture, furnishing, or purchasing of supplies, material, or equipment or for the furnishing of work, labor, or services, in an amount exceeding the threshold for small purchases according to the purchasing laws of this State or $10,000.00, whichever is less, shall contain certification, as a material condition of the contract, by which the contractor agrees that neither the contractor nor any substantially-owned affiliated company is participating or shall participate in an international boycott in violation of the provisions of the U.S. Export Administration Act of 1979 or the regulations of the U.S. Department of Commerce promulgated under that Act.

2. The bidder makes the certification set forth in Section 5 of the Act.

F. <u>Drug Free Workplace</u>

1. The Illinois “Drug Free Workplace Act” applies to this contract and it is necessary to comply with the provisions of the “Act” if the contractor is a corporation, partnership, or other entity (including a sole proprietorship) which has 25 or more employees.

2. The bidder certifies that if awarded a contract in excess of $5,000 it will provide a drug free workplace by:

(a) Publishing a statement notifying employees that the unlawful manufacture, distribution, dispensation, possession or use of a controlled substance, including cannabis, is prohibited in the contractor’s workplace; specifying the actions that will be taken against employees for violations of such prohibition; and notifying the employee that, as a condition of employment on such contract, the employee shall abide by the terms of the statement, and notify the employer of any criminal drug statute conviction for a violation occurring in the workplace no later than five (5) days after such conviction.

(b) Establishing a drug free awareness program to inform employees about the dangers of drug abuse in the workplace; the contractor’s policy of maintaining a drug free workplace; any available drug counseling, rehabilitation, and employee assistance programs; and the penalties that may be imposed upon employees for drug violations.

(c) Providing a copy of the statement required by subparagraph (1) to each employee engaged in the performance of the contract and to post the statement in a prominent place in the workplace.

(d) Notifying the Department within ten (10) days after receiving notice from an employee or otherwise receiving actual notice of the conviction of an employee for a violation of any criminal drug statute occurring in the workplace.

(e) Imposing or requiring, within 30 days after receiving notice from an employee of a conviction or actual notice of such a conviction, an appropriate personnel action, up to and including termination, or the satisfactory participation in a drug abuse assistance or rehabilitation program approved by a federal, state or local health, law enforcement or other appropriate agency.

(f) Assisting employees in selecting a course of action in the event drug counseling, treatment, and rehabilitation is required and indicating that a trained referral team is in place.

(g) Making a good faith effort to continue to maintain a drug free workplace through implementation of the actions and efforts stated in this certification.

G. Debt Delinquency

1. The Illinois Procurement Code provides:

Section 50-11 and 50-12. Debt Delinquency.

The contractor or bidder certifies that it, or any affiliate, is not barred from being awarded a contract under 30 ILCS 500. Section 50-11 prohibits a person from entering into a contract with a State agency if it knows or should know that it, or any affiliate, is delinquent in the payment of any debt to the State as defined by the Debt Collection Board. Section 50-12 prohibits a person from entering into a contract with a State agency if it, or any affiliate, has failed to collect and remit Illinois Use Tax on all sales of tangible personal property into the State of Illinois in accordance with the provisions of the Illinois Use Tax Act. The contractor further acknowledges that the contracting State agency may declare the contract void if this certification is false or if the contractor, or any affiliate, is determined to be delinquent in the payment of any debt to the State during the term of the contract.

H. Sarbanes-Oxley Act of 2002

1. The Illinois Procurement Code provides:

Section 50-60(c).

The contractor certifies in accordance with 30 ILCS 500/50-10.5 that no officer, director, partner or other managerial agent of the contracting business has been convicted of a felony under the Sarbanes-Oxley Act of 2002 or a Class 3 or Class 2 felony under the Illinois Securities Law of 1953 for a period of five years prior to the date of the bid or contract. The contractor acknowledges that the contracting agency shall declare the contract void if this certification is false.

I. ADDENDA

The contractor or bidder certifies that all relevant addenda have been incorporated in to this contract. Failure to do so may cause the bid to be declared unacceptable.

J. Section 42 of the Environmental Protection Act

The contractor certifies in accordance with 30 ILCS 500/50-12 that the bidder or contractor is not barred from being awarded a contract under this Section which prohibits the bidding on or entering into contracts with the State of Illinois or a State agency by a person or business found by a court or the Pollution Control Board to have committed a willful or knowing violation of Section 42 of the Environmental Protection Act for a period of five years from the date of the order. The contractor acknowledges that the contracting agency may declare the contract void if this certification is false.

TO BE RETURNED WITH BID

IV. DISCLOSURES

A. The disclosures hereinafter made by the bidder are each a material representation of fact upon which reliance is placed should the Department enter into the contract with the bidder. The Department may terminate the contract if it is later determined that the bidder rendered a false or erroneous disclosure, and the surety providing the performance bond shall be responsible for completion of the contract.

B. Financial Interests and Conflicts of Interest

1. Section 50-35 of the Illinois Procurement Code provides that all bids of more than $10,000 shall be accompanied by disclosure of the financial interests of the bidder. This disclosed information for the successful bidder, will be maintained as public information subject to release by request pursuant to the Freedom of Information Act.

The financial interests to be disclosed shall include ownership or distributive income share that is in excess of 5%, or an amount greater than 60% of the annual salary of the Governor, of the bidding entity or its parent entity, whichever is less, unless the contractor or bidder is a publicly traded entity subject to Federal 10K reporting, in which case it may submit its 10K disclosure in place of the prescribed disclosure. If a bidder is a privately held entity that is exempt from Federal 10K reporting, but has more than 400 shareholders, it may submit the information that Federal 10K companies are required to report, and list the names of any person or entity holding any ownership share that is in excess of 5%. The disclosure shall include the names, addresses, and dollar or proportionate share of ownership of each person making the disclosure, their instrument of ownership or beneficial relationship, and notice of any potential conflict of interest resulting from the current ownership or beneficial interest of each person making the disclosure having any of the relationships identified in Section 50-35 and on the disclosure form.

In addition, all disclosures shall indicate any other current or pending contracts, proposals, leases, or other ongoing procurement relationships the bidding entity has with any other unit of state government and shall clearly identify the unit and the contract, proposal, lease, or other relationship.

2. Disclosure Forms. Disclosure Form A is attached for use concerning the individuals meeting the above ownership or distributive share requirements. Subject individuals should be covered each by one form. In addition, a second form (Disclosure Form B) provides for the disclosure of current or pending procurement relationships with other (non-IDOT) state agencies. **The forms must be included with each bid or incorporated by reference.**

C. Disclosure Form Instructions

Form A: For bidders that have previously submitted the information requested in Form A

The Department has retained the Form A disclosures submitted by all bidders responding to these requirements for the April 24, 1998 or any subsequent letting conducted by the Department. The bidder has the option of submitting the information again or the bidder may sign the following certification statement indicating that the information previously submitted by the bidder is, as of the date of signature, current and accurate. The Certification must be signed and dated by a person who is authorized to execute contracts for the bidding company. Before signing this certification, the bidder should carefully review its prior submissions to ensure the Certification is correct. If the Bidder signs the Certification, the Bidder should proceed to Form B instructions.

CERTIFICATION STATEMENT

I have determined that the Form A disclosure information previously submitted is current and accurate, and all forms are hereby incorporated by reference in this bid. Any necessary additional forms or amendments to previously submitted forms are attached to this bid.

_____
(Bidding Company)

_____ _____
Name of Authorized Representative (type or print) Title of Authorized Representative (type or print)

_____ _____
Signature of Authorized Representative Date

Form A: For bidders who have NOT previously submitted the information requested in Form A

If the bidder is a publicly traded entity subject to Federal 10K reporting, the 10K Report may be submitted to meet the requirements of Form A. If a bidder is a privately held entity that is exempt from Federal 10K reporting, but has more than 400 shareholders, it may submit the information that Federal 10K companies are required to report, and list the names of any person or entity holding any ownership share that is in excess of 5%. If a bidder is not subject to Federal 10K reporting, the bidder must determine if any individuals are required by law to complete a financial disclosure form. To do this, the bidder should answer each of the following questions. A "YES" answer indicates Form A must be completed. If the answer to each of the following questions is "NO", then the NOT APPLICABLE STATEMENT on the second page of Form A must be signed and dated by a person that is authorized to execute contracts for the bidding company. Note: These questions are for assistance only and are not required to be completed.

1. Does anyone in your organization have a direct or beneficial ownership share of greater than 5% of the bidding entity or parent entity? YES ___ NO___
2. Does anyone in your organization have a direct or beneficial ownership share of less than 5%, but which has a value greater than $90,420.00? YES ____ NO___
3. Does anyone in your organization receive more than $90,420.00 of the bidding entity's or parent entity's distributive income? (Note: Distributive income is, for these purposes, any type of distribution of profits. An annual salary is not distributive income.) YES ___ NO __
4. Does anyone in your organization receive greater than 5% of the bidding entity's or parent entity's total distributive income, but which is less than $90,420.00? YES ____ NO __

   (Note: Only one set of forms needs to be completed per person per bid even if a specific individual would require a yes answer to more than one question.)

A "YES" answer to any of these questions requires the completion of Form A. The bidder must determine each individual in the bidding entity or the bidding entity's parent company that would cause the questions to be answered "Yes". Each form must be signed and dated by a person that is authorized to execute contracts for your organization. **Photocopied or stamped signatures are not acceptable**. The person signing can be, but does not have to be, the person for which the form is being completed. The bidder is responsible for the accuracy of any information provided.

If the answer to each of the above questions is "NO", then the NOT APPLICABLE STATEMENT on page 2 of Form A must be signed and dated by a person that is authorized to execute contracts for your company.

Form B: **Identifying Other Contracts & Procurement Related Information** Disclosure Form B must be completed for each bid submitted by the bidding entity. It must be signed by an individual who is authorized to execute contracts for the bidding entity. *Note: Signing the NOT APPLICABLE STATEMENT on Form A does not allow the bidder to ignore Form B. Form B must be completed, signed and dated or the bidder may be considered nonresponsive and the bid will not be accepted.*

The Bidder shall identify, by checking Yes or No on Form B, whether it has any pending contracts (including leases), bids, proposals, or other ongoing procurement relationship with any other (non-IDOT) State of Illinois agency. If "No" is checked, the bidder only needs to complete the signature box on the bottom of Form B. If "Yes" is checked, the bidder must do one of the following:

Option I: If the bidder did not submit an Affidavit of Availability to obtain authorization to bid, the bidder must list all non-IDOT State of Illinois agency pending contracts, leases, bids, proposals, and other ongoing procurement relationships. These items may be listed on Form B or on an attached sheet(s). Do not include IDOT contracts. Contracts with cities, counties, villages, etc. are not considered State of Illinois agency contracts and are not to be included. Contracts with other State of Illinois agencies such as the Department of Natural Resources or the Capital Development Board must be included. Bidders who submit Affidavits of Availability are suggested to use Option II.

Option II: If the bidder is required and has submitted an Affidavit of Availability in order to obtain authorization to bid, the bidder may write or type "See Affidavit of Availability" which indicates that the Affidavit of Availability is incorporated by reference and includes all non-IDOT State of Illinois agency pending contracts, leases, bids, proposals, and other ongoing procurement relationships. For any contracts that are not covered by the Affidavit of Availability, the bidder must identify them on Form B or on an attached sheet(s). These might be such things as leases.

D. Bidders Submitting More Than One Bid

Bidders submitting multiple bids may submit one set of forms consisting of all required Form A disclosures and one Form B for use with all bids. Please indicate in the space provided below the bid item that contains the original disclosure forms and the bid items which incorporate the forms by reference.

- The bid submitted for letting item _____ contains the Form A disclosures or Certification Statement and the Form B disclosures. The following letting items incorporate the said forms by reference:

_____

_____

RETURN WITH BID/OFFER

ILLINOIS DEPARTMENT OF TRANSPORTATION

Form A
Financial Information & Potential Conflicts of Interest Disclosure

Contractor Name		
Legal Address		
City, State, Zip		
Telephone Number	Email Address	Fax Number (if available)

Disclosure of the information contained in this Form is required by the Section 50-35 of the Illinois Procurement Code (30 ILCS 500). Vendors desiring to enter into a contract with the State of Illinois must disclose the financial information and potential conflict of interest information as specified in this Disclosure Form. This information shall become part of the publicly available contract file. This Form A must be completed for bids in excess of $10,000, and for all open-ended contracts. **A publicly traded company may submit a 10K disclosure (or equivalent if applicable) in satisfaction of the requirements set forth in Form A. See Disclosure Form Instructions.**

DISCLOSURE OF FINANCIAL INFORMATION

1. Disclosure of Financial Information. The individual named below has an interest in the BIDDER (or its parent) in terms of ownership or distributive income share in excess of 5%, or an interest which has a value of more than $90,420.00 (60% of the Governor's salary as of 7/1/01). **(Make copies of this form as necessary and attach a separate Disclosure Form A for each individual meeting these requirements)**

FOR INDIVIDUAL (type or print information)

NAME: _____

ADDRESS _____

_____

Type of ownership/distributable income share:

stock _____ sole proprietorship _____ Partnership _____ other: (explain on separate sheet):

% or $ value of ownership/distributable income share: _____

2. Disclosure of Potential Conflicts of Interest. Check "Yes" or "No" to indicate which, if any, of the following potential conflict of interest relationships apply. If the answer to any question is "Yes", please attach additional pages and describe.

(a) State employment, currently or in the previous 3 years, including contractual employment of services. Yes ___No __

If your answer is yes, please answer each of the following questions.

1. Are you currently an officer or employee of either the Capitol Development Board or the Illinois Toll Highway Authority? Yes ___No __

2. Are you currently appointed to or employed by any agency of the State of Illinois? If you are currently appointed to or employed by any agency of the State of Illinois, and your annual salary exceeds $90,420.00, (60% of the Governor's salary as of 7/1/01) provide the name the State agency for which you are employed and your annual salary. _____
_____

3. If you are currently appointed to or employed by any agency of the State of Illinois, and your annual salary exceeds $90,420.00, (60% of the Governor's salary as of 7/1/01) are you entitled to receive (i) more than 7 1/2% of the total distributable income of your firm, partnership, association or corporation, or (ii) an amount in excess of the salary of the Governor? Yes ___ No __

4. If you are currently appointed to or employed by any agency of the State of Illinois, and your annual salary exceeds $90,420.00, (60% of the Governor's salary as of 7/1/01) are you and your spouse or minor children entitled to receive (i) more than 15% in aggregate of the total distributable income of your firm, partnership, association or corporation, or (ii) an amount in excess of 2 times the salary of the Governor? Yes ___ No __

(b) State employment of spouse, father, mother, son, or daughter, including contractual employment for services in the previous 2 years.

Yes ___No __

If your answer is yes, please answer each of the following questions.

1. Is your spouse or any minor children currently an officer or employee of the Capitol Development Board or the Illinois Toll Highway Authority? Yes ___No __

2. Is your spouse or any minor children currently appointed to or employed by any agency of the State of Illinois? If your spouse or minor children is/are currently appointed to or employed by any agency of the State of Illinois, and his/her annual salary exceeds $90,420.00, (60% of the Governor's salary as of 7/1/01) provide the name of the spouse and/or minor children, the name of the State agency for which he/she is employed and his/her annual salary. _____
_____

3. If your spouse or any minor children is/are currently appointed to or employed by any agency of the State of Illinois, and his/her annual salary exceeds $90,420.00, (60% of the salary of the Governor as of 7/1/01) are you entitled to receive (i) more than 71/2% of the total distributable income of your firm, partnership, association or corporation, or (ii) an amount in excess of the salary of the Governor? Yes ___ No __

4. If your spouse or any minor children are currently appointed to or employed by any agency of the State of Illinois, and his/her annual salary exceeds $90,420.00, (60% of the Governor's salary as of 7/1/01) are you and your spouse or any minor children entitled to receive (i) more than 15% in the aggregate of the total distributable income from your firm, partnership, association or corporation, or (ii) an amount in excess of 2 times the salary of the Governor?

Yes ___ No __

(c) Elective status; the holding of elective office of the State of Illinois, the government of the United States, any unit of local government authorized by the Constitution of the State of Illinois or the statutes of the State of Illinois currently or in the previous 3 years. Yes ___No __

(d) Relationship to anyone holding elective office currently or in the previous 2 years; spouse, father, mother, son, or daughter. Yes ___No __

(e) Appointive office; the holding of any appointive government office of the State of Illinois, the United State of America, or any unit of local government authorized by the Constitution of the State of Illinois or the statues of the State of Illinois, which office entitles the holder to compensation in excess of the expenses incurred in the discharge of that office currently or in the previous 3 years. Yes ___No __

(f) Relationship to anyone holding appointive office currently or in the previous 2 years; spouse, father, mother, son, or daughter. Yes ___No __

(g) Employment, currently or in the previous 3 years, as or by any registered lobbyist of the State government.

Yes ___No __

RETURN WITH BID/OFFER

(h) Relationship to anyone who is or was a registered lobbyist in the previous 2 years; spouse, father, mother, son, or daughter. Yes ___No __

(i) Compensated employment, currently or in the previous 3 years, by any registered election or reelection committee registered with the Secretary of State or any county clerk of the State of Illinois, or any political action committee registered with either the Secretary of State or the Federal Board of Elections.
Yes ___ No __

(j) Relationship to anyone; spouse, father, mother, son, or daughter; who was a compensated employee in the last 2 years by any registered election or re-election committee registered with the Secretary of State or any county clerk of the State of Illinois, or any political action committee registered with either the Secretary of State or the Federal Board of Elections.
Yes ___ No __

APPLICABLE STATEMENT

This Disclosure Form A is submitted on behalf of the INDIVIDUAL named on previous page.

Completed by: _____
Name of Authorized Representative (type or print)

Completed by: _____
Title of Authorized Representative (type or print)

Completed by: _____ _____
Signature of Individual or Authorized Representative Date

NOT APPLICABLE STATEMENT

I have determined that no individuals associated with this organization meet the criteria that would require the completion of this Form A.

This Disclosure Form A is submitted on behalf of the CONTRACTOR listed on the previous page.

_____
Name of Authorized Representative (type or print)

_____
Title of Authorized Representative (type or print)

_____ _____
Signature of Authorized Representative Date

RETURN WITH BID/OFFER

ILLINOIS DEPARTMENT OF TRANSPORTATION

Form B
Other Contracts & Procurement Related Information Disclosure

Contractor Name		
Legal Address		
City, State, Zip		
Telephone Number	Email Address	Fax Number (if available)

Disclosure of the information contained in this Form is required by the Section 50-35 of the Illinois Procurement Act (30 ILCS 500). This information shall become part of the publicly available contract file. This Form B must be completed for bids in excess of $10,000, and for all open-ended contracts.

DISCLOSURE OF OTHER CONTRACTS AND PROCUREMENT RELATED INFORMATION

1. Identifying Other Contracts & Procurement Related Information. The BIDDER shall identify whether it has any pending contracts (including leases), bids, proposals, or other ongoing procurement relationship with any other State of Illinois agency: Yes ___ No __
If "No" is checked, the bidder only needs to complete the signature box on the bottom of this page.

2. If "Yes" is checked. Identify each such relationship by showing State of Illinois agency name and other descriptive information such as bid or project number (attach additional pages as necessary). SEE DISCLOSURE FORM INSTRUCTIONS:

THE FOLLOWING STATEMENT MUST BE SIGNED

_____
Name of Authorized Representative (type or print)

_____
Title of Authorized Representative (type or print)

_____ _____
Signature of Authorized Representative Date

RETURN WITH BID

SPECIAL NOTICE TO CONTRACTORS

The following requirements of the Illinois Department of Human Rights' Rules and Regulations are applicable to bidders on all construction contracts advertised by the Illinois Department of Transportation:

CONSTRUCTION EMPLOYEE UTILIZATION PROJECTION

(a) All bidders on construction contracts shall complete and submit, along with and as part of their bids, a Bidder's Employee Utilization Form (Form BC-1256) setting forth a projection and breakdown of the total workforce intended to be hired and/or allocated to such contract work by the bidder including a projection of minority and female employee utilization in all job classifications on the contract project.

(b) The Department of Transportation shall review the Employee Utilization Form, and workforce projections contained therein, of the contract awardee to determine if such projections reflect an underutilization of minority persons and/or women in any job classification in accordance with the Equal Employment Opportunity Clause and Section 7.2 of the Illinois Department of Human Rights' Rules and Regulations for Public Contracts adopted as amended on September 17, 1980. If it is determined that the contract awardee's projections reflect an underutilization of minority persons and/or women in any job classification, it shall be advised in writing of the manner in which it is underutilizing and such awardee shall be considered to be in breach of the contract unless, prior to commencement of work on the contract project, it submits revised satisfactory projections or an acceptable written affirmative action plan to correct such underutilization including a specific timetable geared to the completion stages of the contract.

(c) The Department of Transportation shall provide to the Department of Human Rights a copy of the contract awardee's Employee Utilization Form, a copy of any required written affirmative action plan, and any written correspondence related thereto. The Department of Human Rights may review and revise any action taken by the Department of Transportation with respect to these requirements.

Rev. 3/98

RETURN WITH BID

Illinois Department of Transportation

Contract No. 92656
MORGAN-CASS Counties
Section 147(RS-5,B-1,B-2)
Project ACF-614(23)
Route FAP 614
District 6 Construction Funds

PART I. IDENTIFICATION

Dept. Human Rights # _____ Duration of Project: _____

Name of Bidder: _____

PART II. WORKFORCE PROJECTION

A. The undersigned bidder has analyzed minority group and female populations, unemployment rates and availability of workers for the location in which this contract work is to be performed, and for the locations from which the bidder recruits employees, and hereby submits the following workforce projection including a projection for minority and female employee utilization in all job categories in the workforce to be allocated to this contract:

TABLE A — TOTAL Workforce Projection for Contract

JOB CATEGORIES	TOTAL EMPLOYEES		MINORITY EMPLOYEES: BLACK		MINORITY EMPLOYEES: HISPANIC		MINORITY EMPLOYEES: *OTHER MINOR.		TRAINEES: APPRENTICES		TRAINEES: ON THE JOB TRAINEES	
	M	F	M	F	M	F	M	F	M	F	M	F
OFFICIALS (MANAGERS)												
SUPERVISORS												
FOREMEN												
CLERICAL												
EQUIPMENT OPERATORS												
MECHANICS												
TRUCK DRIVERS												
IRONWORKERS												
CARPENTERS												
CEMENT MASONS												
ELECTRICIANS												
PIPEFITTERS, PLUMBERS												
PAINTERS												
LABORERS, SEMI-SKILLED												
LABORERS, UNSKILLED												
TOTAL												

TABLE B — CURRENT EMPLOYEES TO BE ASSIGNED TO CONTRACT

TOTAL EMPLOYEES		MINORITY EMPLOYEES	
M	F	M	F

TABLE C — TOTAL Training Projection for Contract

EMPLOYEES IN TRAINING	TOTAL EMPLOYEES		BLACK		HISPANIC		*OTHER MINOR.	
	M	F	M	F	M	F	M	F
APPRENTICES								
ON THE JOB TRAINEES								

*Other minorities are defined as Asians (A) or Native Americans (N).

Please specify race of each employee shown in Other Minorities column.

FOR DEPARTMENT USE ONLY

Note: See instructions on the next page

BC 1256 - Pg 1 (Rev. 3/98)
IL 494-0454

PART II. WORKFORCE PROJECTION - continued

B. Included in "Total Employees" under Table A is the total number of **new hires** that would be employed in the event the undersigned bidder is awarded this contract.

The undersigned bidder projects that: (number) _____ new hires would be recruited from the area in which the contract project is located; and/or (number) _____ new hires would be recruited from the area in which the bidder's principal office or base of operation is located.

C. Included in "Total Employees" under Table A is a projection of numbers of persons to be employed directly by the undersigned bidder as well as a projection of numbers of persons to be employed by subcontractors.

The undersigned bidder estimates that (number) _____ persons will be directly employed by the prime contractor and that (number) _____ persons will be employed by subcontractors.

PART III. AFFIRMATIVE ACTION PLAN

A. The undersigned bidder understands and agrees that in the event the foregoing minority and female employee utilization projection included under **PART II** is determined to be an underutilization of minority persons or women in any job category, and in the event that the undersigned bidder is awarded this contract, he/she will, prior to commencement of work, develop and submit a written Affirmative Action Plan including a specific timetable (geared to the completion stages of the contract) whereby deficiencies in minority and/or female employee utilization are corrected. Such Affirmative Action Plan will be subject to approval by the contracting agency and the **Department of Human Rights**.

B. The undersigned bidder understands and agrees that the minority and female employee utilization projection submitted herein, and the goals and timetable included under an Affirmative Action Plan if required, are deemed to be part of the contract specifications.

Company _____ Telephone Number _____

_____

Address _____

NOTICE REGARDING SIGNATURE

The Bidder's signature on the Proposal Signature Sheet will constitute the signing of this form. The following signature block needs to be completed only if revisions are required.

Signature: _____ Title: _____ Date: _____

Instructions: All tables must include subcontractor personnel in addition to prime contractor personnel.

Table A - Include both the number of employees that would be hired to perform the contract work and the total number currently employed (Table B) that will be allocated to contract work, and include all apprentices and on-the-job trainees. The "Total Employees" column should include all employees including all minorities, apprentices and on-the-job trainees to be employed on the contract work.

Table B - Include all employees currently employed that will be allocated to the contract work including any apprentices and on-the-job trainees currently employed.

Table C - Indicate the racial breakdown of the total apprentices and on-the-job trainees shown in Table A.

RETURN WITH BID

ADDITIONAL FEDERAL REQUIREMENTS

In addition to the Required Contract Provisions for Federal-Aid Construction Contracts (FHWA 1273), all bidders make the following certifications.

A. By the execution of this proposal, the signing bidder certifies that the bidding entity has not, either directly or indirectly, entered into any agreement, participated in any collusion, or otherwise taken any action, in restraint of free competitive bidding in connection with the submitted bid. This statement made by the undersigned bidder is true and correct under penalty of perjury under the laws of the United States.

B. CERTIFICATION, EQUAL EMPLOYMENT OPPORTUNITY:

1. Have you participated in any previous contracts or subcontracts subject to the equal opportunity clause. YES _____ NO _____

2. If answer to #1 is yes, have you filed with the Joint Reporting Committee, the Director of OFCC, any Federal agency, or the former President's Committee on Equal Employment Opportunity, all reports due under the applicable filing requirements of those organizations? YES _____ NO _____

RETURN WITH BID

Contract No. 92656
MORGAN-CASS Counties
Section 147(RS-5,B-1,B-2)
Project ACF-614(23)
Route FAP 614
District 6 Construction Funds

PROPOSAL SIGNATURE SHEET

The undersigned bidder hereby makes and submits this bid on the subject Proposal, thereby assuring the Department that all requirements of the Invitation for Bids and rules of the Department have been met, that there is no misunderstanding of the requirements of paragraph 3 of this Proposal, and that the contract will be executed in accordance with the rules of the Department if an award is made on this bid.

(IF AN INDIVIDUAL)

Firm Name _____

Signature of Owner _____

Business Address _____

_____

(IF A CO-PARTNERSHIP)

Firm Name _____

By _____

Business Address _____

_____

Name and Address of All Members of the Firm:

_____ _____

_____ _____

(IF A CORPORATION)

Corporate Name _____

By _____
Signature of Authorized Representative

_____
Typed or printed name and title of Authorized Representative

Attest _____
Signature

(IF A JOINT VENTURE, USE THIS SECTION FOR THE MANAGING PARTY AND THE SECOND PARTY SHOULD SIGN BELOW)

Business Address _____

_____

(IF A JOINT VENTURE)

Corporate Name _____

By _____
Signature of Authorized Representative

_____
Typed or printed name and title of Authorized Representative

Attest _____
Signature

Business Address _____

_____

If more than two parties are in the joint venture, please attach an additional signature sheet.

RETURN WITH BID

Illinois Department of Transportation

Division of Highways
Proposal Bid Bond
(Effective November 1, 1992)

Item No. _____
Letting Date _____

KNOW ALL MEN BY THESE PRESENTS, That We _____

_____

as PRINCIPAL, and _____

_____ as SURETY, are held jointly, severally and firmly bound unto the STATE OF ILLINOIS in the penal sum of 5 percent of the total bid price, or for the amount specified in Article 102.09 of the "Standard Specifications for Road and Bridge Construction" in effect on the date of invitation for bids, whichever is the lesser sum, well and truly to be paid unto said STATE OF ILLINOIS, for the payment of which we bind ourselves, our heirs, executors, administrators, successors and assigns.

THE CONDITION OF THE FOREGOING OBLIGATION IS SUCH, That Whereas, the PRINCIPAL has submitted a bid proposal to the STATE OF ILLINOIS, acting through the Department of Transportation, for the improvement designated by the Transportation Bulletin Item Number and Letting Date indicated above.

NOW, THEREFORE, if the Department shall accept the bid proposal of the PRINCIPAL; and if the PRINCIPAL shall, within the time and as specified in the bidding and contract documents, submit a DBE Utilization Plan that is accepted and approved by the Department; and if, after award by the Department, the PRINCIPAL shall enter into a contract in accordance with the terms of the bidding and contract documents including evidence of the required insurance coverages and providing such bond as specified with good and sufficient surety for the faithful performance of such contract and for the prompt payment of labor and material furnished in the prosecution thereof; or if, in the event of the failure of the PRINCIPAL to make the required DBE submission or to enter into such contract and to give the specified bond, the PRINCIPAL pays to the Department the difference not to exceed the penalty hereof between the amount specified in the bid proposal and such larger amount for which the Department may contract with another party to perform the work covered by said bid proposal, then this obligation shall be null and void, otherwise, it shall remain in full force and effect.

IN THE EVENT the Department determines the PRINCIPAL has failed to comply with any requirement as set forth in the preceding paragraph, then Surety shall pay the penal sum to the Department within fifteen (15) days of written demand therefor. If Surety does not make full payment within such period of time, the Department may bring an action to collect the amount owed. Surety is liable to the Department for all its expenses, including attorney's fees, incurred in any litigation in which it prevails either in whole or in part.

In TESTIMONY WHEREOF, the said PRINCIPAL and the said SURETY have caused this instrument to be signed by their respective officers this _____ day of _____ A.D., _____.

PRINCIPAL	**SURETY**
_____	_____
(Company Name)	(Company Name)
By: _____	By: _____
(Signature & Title)	(Signature of Attorney-in-Fact)

Notary Certification for Principal and Surety

STATE OF ILLINOIS,
COUNTY OF _____

I, _____, a Notary Public in and for said County, do hereby certify that

_____ and _____

(Insert names of individuals signing on behalf of PRINCIPAL & SURETY)

who are each personally known to me to be the same persons whose names are subscribed to the foregoing instrument on behalf of PRINCIPAL and SURETY, appeared before me this day in person and acknowledged respectively, that they signed and delivered said instrument as their free and voluntary act for the uses and purposes therein set forth.

Given under my hand and notarial seal this _____ day of _____, A.D. _____.

My commission expires _____ _____
Notary Public

In lieu of completing the above section of the Proposal Bid Form, the Principal may file an Electronic Bid Bond. By signing below the Principal is ensuring the identified electronic bid bond has been executed and the Principal and Surety are firmly bound unto the State of Illinois under the conditions of the bid bond as shown above.

_____	_____	_____
Electronic Bid Bond ID#	Company/Bidder Name	Signature and Title

PROPOSAL ENVELOPE

Illinois Department of Transportation

PROPOSALS

for construction work advertised for bids by the
Illinois Department of Transportation

Item No.	Item No.	Item No.

Submitted By:

Name:
Address:
Phone No.

Bidders should use an IDOT proposal envelope or affix this form to the front of a 10” x 13” envelope for the submittal of bids. If proposals are mailed, they should be enclosed in a second or outer envelope addressed to:

Engineer of Design and Environment - Room 323
Illinois Department of Transportation
2300 South Dirksen Parkway
Springfield, Illinois 62764

NOTICE

Individual bids, including Bid Bond and/or supplemental information if required, should be securely stapled.

CONTRACTOR OFFICE COPY OF CONTRACT SPECIFICATIONS

NOTICE

None of the following material needs to be returned with the bid package unless the special provisions require documentation and/or other information to be submitted.

Contract No. 92656
MORGAN-CASS Counties
Section 147(RS-5,B-1,B-2)
Project ACF-614(23)
Route FAP 614
District 6 Construction Funds

Illinois Department of Transportation

Illinois Department of Transportation

NOTICE TO BIDDERS

1. **TIME AND PLACE OF OPENING BIDS.** Sealed proposals for the improvement described herein will be received by the Department of Transportation at the Harry R. Hanley Building, 2300 South Dirksen Parkway, in Springfield, Illinois until 10:00 o'clock a.m., March 5, 2004. All bids will be gathered, sorted, publicly opened and read in the auditorium at the Department of Transportation's Harry R. Hanley Building shortly after the 10:00 a.m. cut off time.

2. **DESCRIPTION OF WORK**. The proposed improvement is identified and advertised for bids in the Invitation for Bids as:

   Contract No. 92656
   MORGAN-CASS Counties
   Section 147(RS-5,B-1,B-2)
   Project ACF-614(23)
   Route FAP 614
   District 6 Construction Funds

8.32 km of pavement patching, bituminous surface removal, 7.3 m and variable width bituminous concrete resurfacing, pavement removal, bituminous shoulders and aggregate shoulders on IL Route 78 from Snake Creek located approximately 3 miles north of Jacksonville extending north to just north of the Cass County Line. Also included is the construction of a single span, 1 @ 18.8 m, precast prestressed concrete I-beam bridge over a Fork of Indian Creek and a single span, 1 @ 30.0 m, precast prestressed concrete I-beam bridge over Little Indian Creek.

3. **INSTRUCTIONS TO BIDDERS**. (a) This Notice, the invitation for bids, proposal and letter of award shall, together with all other documents in accordance with Article 101.09 of the Standard Specifications for Road and Bridge Construction, become part of the contract. Bidders are cautioned to read and examine carefully all documents, to make all required inspections, and to inquire or seek explanation of the same prior to submission of a bid.

   (b) State law, and, if the work is to be paid wholly or in part with Federal-aid funds, Federal law requires the bidder to make various certifications as a part of the proposal and contract. By execution and submission of the proposal, the bidder makes the certification contained therein. A false or fraudulent certification shall, in addition to all other remedies provided by law, be a breach of contract and may result in termination of the contract.

4. **AWARD CRITERIA AND REJECTION OF BIDS**. This contract will be awarded to the lowest responsive and responsible bidder considering conformity with the terms and conditions established by the Department in the rules, Invitation for Bids and contract documents. The issuance of plans and proposal forms for bidding based upon a prequalification rating shall not be the sole determinant of responsibility. The Department reserves the right to determine responsibility at the time of award, to reject any or all proposals, to readvertise the proposed improvement, and to waive technicalities.

By Order of the
Illinois Department of Transportation

Timothy W. Martin, Secretary

BD 351 (Rev. 01/2003)

INDEX
FOR
SUPPLEMENTAL SPECIFICATIONS
AND RECURRING SPECIAL PROVISIONS

Adopted January 1, 2004

This index contains a listing of SUPPLEMENTAL SPECIFICATIONS and frequently used RECURRING SPECIAL PROVISIONS.

ERRATA Standard Specifications for Road and Bridge Construction
(Adopted 1-1-02) (Revised 1-1-04)

SUPPLEMENTAL SPECIFICATIONS

Std. Spec. Sec.		Page No.
101	Definition of Terms	1
105	Control of Work	2
205	Embankment	3
251	Mulch	4
440	Removal of Existing Pavement and Appurtenances	5
442	Pavement Patching	6
449	Removal and Replacement of Preformed Elastomeric Compression Joint Seal	7
501	Removal of Existing Structures	8
503	Concrete Structures	9
505	Steel Structures	10
506	Cleaning and Painting Metal Structures	13
508	Reinforcement Bars	14
512	Piling	15
540	Box Culverts	16
669	Removal and Disposal of Regulated Substances	18
671	Mobilization	19
702	Work Zone Traffic Control Devices	20
1003	Fine Aggregates	21
1004	Coarse Aggregate	22
1020	Portland Cement Concrete	25
1021	Concrete Admixtures	32
1022	Concrete Curing Materials	33
1024	Nonshrink Grout	35
1056	Preformed Flexible Gaskets and Mastic Joint Sealer for Sewer and Culvert Pipe	37
1060	Waterproofing Materials	38
1069	Pole and Tower	39
1070	Foundation and Breakaway Devices	40
1077	Post and Foundation	42
1080	Fabric Materials	43
1083	Elastomeric Bearings	46
1094	Overhead Sign Structures	47
1103	Portland Cement Concrete Equipment	48

RECURRING SPECIAL PROVISIONS

The following RECURRING SPECIAL PROVISIONS indicated by an "X" are applicable to this contract and are included by reference:

CHECK SHEET #			PAGE NO.
1	X	State Required Contract Provisions All Federal-aid Construction Contracts (Eff. 2-1-69) (Rev. 10-1-83)	49
2	X	Subletting of Contracts (Federal-aid Contracts) (Eff. 1-1-88) (Rev. 5-1-93)	51
3	X	EEO (Eff. 7-21-78) (Rev. 11-18-80)	52
4		Specific Equal Employment Opportunity Responsibilities NonFederal-aid Contracts (Eff. 3-20-69) (Rev. 1-1-94)	63
5		Required Provisions - State Contracts (Eff. 4-1-65) (Rev. 4-1-93)	69
6		Reserved	74
7	X	Asphalt Quantities and Cost Reviews (Eff. 7-1-88)	75
8	X	National Pollutant Discharge Elimination System Permit (Eff. 7-1-94) (Rev. 1-1-03)	76
9		Haul Road Stream Crossings, Other Temporary Stream Crossings and In-Stream Work Pads (Eff. 1-2-92) (Rev. 1-1-98)	77
10		Construction Layout Stakes Except for Bridges (Eff. 1-1-99) (Rev. 1-1-02)	78
11	X	Construction Layout Stakes (Eff. 5-1-93) (Rev. 1-1-02)	81
12		Use of Geotextile Fabric for Railroad Crossing (Eff. 1-1-95) (Rev. 1-1-97)	84
13		Asphaltic Emulsion Slurry Seal and Fibrated Asphaltic Emulsion Slurry Seal (Eff. 8-1-89) (Rev. 2-1-97)	86
14		Bituminous Surface Treatments Half-Smart (Eff. 7-1-93) (Rev. 1-1-97)	92
15	X	Quality Control/Quality Assurance of Bituminous Concrete Mixtures (Eff. 1-1-00) (Rev. 1-1-04)	98
16		Subsealing of Concrete Pavements (Eff. 11-1-84) (Rev. 2-1-95)	117
17		Bituminous Surface Removal (Cold Milling) (Eff. 11-1-87) (Rev. 10-15-97)	121
18	X	Resurfacing of Milled Surfaces (Eff. 10-1-95)	123
19		PCC Partial Depth Bituminous Patching (Eff. 1-1-98)	124
20		Patching with Bituminous Overlay Removal (Eff. 10-1-95) (Rev. 7-1-99)	126
21		Reserved	128
22		Protective Shield System (Eff. 4-1-95) (Rev. 1-1-03)	129
23		Polymer Concrete (Eff. 8-1-95) (Rev.1-1-04)	131
24		Controlled Low-Strength Material (CLSM) (Eff. 1-1-90) (Rev. 1-1-00)	133
25		Pipe Underdrains (Eff. 9-9-87) (Rev. 1-1-98)	138
26	X	Guardrail and Barrier Wall Delineation (Eff. 12-15-93) (Rev. 1-1-97)	139
27		Bicycle Racks (Eff. 4-1-94) (Rev. 1-1-97)	144
28		Give em a Brake Sign (Eff. 8-1-89) (Rev. 8-1-91)	146
29		Portable Changeable Message Signs (Eff. 11-1-93) (Rev. 2-1-96)	147
30		Reserved	148
31		Night Time Inspection of Roadway Lighting (Eff. 5-1-96)	149
32		Reserved	150
33	X	English Substitution of Metric Bolts (Eff. 7-1-96)	151
34	X	English Substitution of Metric Reinforcement Bars (Eff. 4-1-96) (Rev. 1-1-03)	152
35		Polymer Modified Emulsified Asphalt (Eff. 5-15-89) (Rev. 1-1-04)	154
36		Corrosion Inhibitor (Eff. 3-1-80) (Rev. 7-1-99)	156
37		Quality Control of Concrete Mixtures at the Plant-Single A (Eff. 8-1-00) (Rev. 1-1-04)	157
38	X	Quality Control of Concrete Mixtures at the Plant-Double A (Eff. 8-1-00) (Rev. 1-1-04)	163
39		Quality Control/Quality Assurance of Concrete Mixtures (Eff. 4-1-92) (Rev. 1-1-04)	171
40	X	Traffic Barrier Terminal Type 1, Special (Eff. 8-1-94) (Rev. 1-1-03)	185
41		Reserved	186
42	X	Segregation Control of Bituminous Concrete (Eff. 7-15-97)	187
43		Reserved	190

TABLE OF CONTENTS

LOCATION OF PROJECT 1
DESCRIPTION OF PROJECT 1
TRAFFIC CONTROL PLAN 1
COMPLETION DATE 5
PAYROLLS AND PROCEDURES 5
STATUS OF UTILITIES TO BE ADJUSTED 6
CONSTRUCTION LAYOUT RESPONSIBILITY 7
BITUMINOUS SURFACE REMOVAL, VARIABLE DEPTH 7
BITUMINOUS SURFACE REMOVAL – BUTT JOINT 8
PAVEMENT STATIONING NUMBERS AND PLACEMENT 8
FURNISHING AND ERECTING RIGHT-OF-WAY MARKERS 9
TRAFFIC BARRIER TERMINAL, TYPE 1 9
CONCRETE GUTTER, TYPE A (MODIFIED) 9
CLASS SI CONCRETE (OUTLET) 9
GUTTER OUTLET REMOVAL 10
REMOVE EXISTING CULVERTS 10
CONCRETE COLLAR 10
TEMPORARY SHEET PILING 11
STONE DUMPED RIPRAP WITH CONCRETE SLURRY 12
STONE DUMPED RIPRAP 12
CONCRETE BOX CULVERTS 13
EARTH EXCAVATION (WIDENING) 13
TEMPORARY EROSION CONTROL 14
TEMPORARY SEEDING 14
TRANSVERSE DRAINS 15
ROCKFILL – FOUNDATION 15
EMBANKMENT 16
AGGREGATE SUBGRADE 18
FABRIC REINFORCED ELASTOMERIC MAT 18
TEMPORARY SOIL RETENTION SYSTEM 19
PRECAST CONCRETE STRUCTURES 20
BITUMINOUS BASE COURSE / WIDENING SUPERPAVE (BDE) 23
BITUMINOUS CONCRETE SURFACE COURSE (BDE) 27
BRIDGE DECK CONSTRUCTION 28

CALCIUM CHLORIDE ACCELERATOR FOR PORTLAND CEMENT CONCRETE PATCHING (BDE)... 29
COARSE AGGREGATE FOR TRENCH BACKFILL, BACKFILL AND BEDDING (BDE) 30
CONCRETE ADMIXTURES (BDE)..... 36
CONTROLLED AGGREGATE MIXING SYSTEM (BDE) 40
CORRUGATED METAL PIPE CULVERTS (BDE) 41
CURING AND PROTECTION OF CONCRETE CONSTRUCTION (BDE) 41
DISADVANTAGED BUSINESS ENTERPRISE PARTICIPATION (BDE) 48
EPOXY COATINGS FOR STEEL REINFORCEMENT (BDE) 55
EPOXY COATING ON REINFORCEMENT (BDE)..... 56
EROSION AND SEDIMENT CONTROL DEFICIENCY DEDUCTION (BDE) 56
FLAGGER VESTS (BDE) 57
FLUORESCENT ORANGE SHEETING ON DRUMS (BDE)..... 57
FREEZE-THAW RATING (BDE)..... 57
HAND VIBRATOR (BDE)..... 58
IMPACT ATTENUATORS, TEMPORARY (BDE)..... 58
LIME GRADATION REQUIREMENTS (BDE) 60
PARTIAL PAYMENTS (BDE)..... 60
PAYMENTS TO SUBCONTRACTORS (BDE) 61
PORTLAND CEMENT CONCRETE (BDE) 62
PORTLAND CEMENT CONCRETE PATCHING (BDE) 62
PRECAST CONCRETE (BDE) 65
PREFORMED RECYCLED RUBBER JOINT FILLER (BDE)..... 67
RAP FOR USE IN BITUMINOUS CONCRETE MIXTURES (BDE)..... 67
STABILIZED SUBBASE AND BITUMINOUS SHOULDERS SUPERPAVE (BDE)..... 70
STONE FOR EROSION PROTECTION, SEDIMENT CONTROL, AND ROCKFILL (BDE) 75
SUBGRADE PREPARATION (BDE) 78
SUPERPAVE BITUMINOUS CONCRETE MIXTURES (BDE)..... 78
SURFACE TESTING OF PAVEMENTS (BDE) 84
404 PERMIT..... 91
TEMPORARY CONCRETE BARRIER (BDE) 112
TEMPORARY EROSION CONTROL (BDE) 114
TEMPORARY PORTABLE BRIDGE TRAFFIC SIGNALS (BDE) 115
TRAFFIC BARRIER TERMINALS (BDE) 116
TRAFFIC CONTROL DEFICIENCY DEDUCTION (BDE) 117
VERTICAL BARRICADES (BDE) 117
WEIGHT CONTROL DEFICIENCY DEDUCTION..... 118
WORK ZONE TRAFFIC CONTROL DEVICES (BDE) 119
F SHAPE PARAPET 120

STATE OF ILLINOIS

SPECIAL PROVISIONS

The following Special Provisions supplement the "Standard Specifications for Road and Bridge Construction," adopted January 1, 2002, the latest edition of the "Manual on Uniform Traffic Control Devices for Streets and Highways," and the "Manual of Test Procedures for Materials" in effect on the date of invitation for bids, and the Supplemental Specifications and Recurring Special Provisions indicated on the Check Sheet included herein which apply to and govern the construction of FAP Route 614 (IL 78), Project ACF-0614(023), Section 147 (RS-5, B-1, B-2), Morgan and Cass Counties, and in case of conflict with any part or parts of said Specifications, the said Special Provisions shall take precedence and shall govern.

FAP ROUTE 614 (IL 78)
SECTION 147 (RS-5, B-1, B-2)
MORGAN and CASS COUNTIES

LOCATION OF PROJECT

This project is located on IL 78 from Snake Creek, 3.0 miles north of Jacksonville to just north of the Cass County Line.

DESCRIPTION OF PROJECT

The work in this section consists of milling, patching, resurfacing, bridge replacements, box culvert extension, and providing bituminous and aggregate shoulder. Other work includes seeding, pavement striping, and other related work items.

TRAFFIC CONTROL PLAN

Effective: November 1, 1984

Traffic control shall be in accordance with the applicable sections of the Standard Specifications for Road and Bridge Construction, the applicable guidelines contained in the Illinois Manual on Uniform Traffic Control Devices for Streets and Highways, these Special Provisions, any special details and Highway Standards contained herein and in the plans.

Special attention is called to Sections 107 and 701 through 705 of the Standard Specifications for Road and Bridge Construction, and as amended by the Supplemental Specifications, Recurring Special Provisions, the Special Provisions contained herein, and the following highway standards relating to traffic control:

701001	701006	701011	701201	701301	701306
701311	701321	701326	701331	702001	704001
BLR 21	BLR 22				

Limitations of Construction: The Contractor shall coordinate the items of work in order to keep hazards and traffic inconveniences to a minimum, as specified below.

1. During the construction of this section at least one lane shall remain open to traffic at all times.

2. The Contractor shall provide, erect, and maintain all the necessary barricades, cones, drums, and lights for the warning and protection of traffic, as required by Sections 107 and 701 through 703 of the Standard Specifications, and as modified.

3. The Contractor shall furnish and post-mount "Road Construction Next 5 Miles" G20-1(0) and when applicable, "No Passing Zones Not Striped Next 5 Miles" G20-I100(0) at the beginning of this project. "End of Construction" signs G20-2a(0) shall also be post-mounted in its proper place in accordance with traffic standard 702001.

   The Contractor shall also furnish and erect "Road Construction Ahead" signs (W20-1(O)-48) on all side roads when working within the limits of the project's side road intersections. All other signing shall be tri-pod mounted so as to keep the proper spacing with all other standard operations.

4. Traffic shall be maintained as described in the traffic control and stage construction plans or as directed by the Engineer. Pay special attention to staging notes and construction sequences for each respective traffic control plan.

5. The Contractor shall contact Jim Smith (phone 785-0288) of the District 6 Sign Shop for "No Passing Zone" field verification.

6. All debris shall be removed from the pavement and shoulders prior to removal of traffic control.

7. In addition, to the flagmen required by the various standards, additional flagmen shall be provided by the Contractor, if required by the Engineer, and they will be paid in accordance with Article 109.04 of the Standard Specifications.

8. The Contractor will be responsible for the traffic devices at all times during construction activities and throughout winter shutdown periods.

9. Revise the first paragraph of Article 702.05(a): "General: Sign posts must be 100 x 100 mm (4 x 4 inches) wood posts according to Article 1093.01(b). The use of metal posts will not be permitted."

10. In addition to the signs required under the various traffic control standards, "Uneven Lanes" signs WB-11(O)48 will be required any time there is a difference in elevation at the centerline. The signs shall be placed just prior to the work that will result in the drop-off and shall remain in place until the drop-off is eliminated.

These signs will not be paid for separately but cost considered included in the various traffic control and protection pay items.

Keeping Roads Open To Traffic: Traffic Control and Protection Standards included in these plans shall be installed and operational at all times during construction of this section. IL 78 shall be kept open at least one lane of traffic in each direction at all times, which will be controlled by flaggers, per Standards 701201 and 701306. Traffic shall be controlled by traffic signals at structures 069-0503, 069-0502 and 069-0151 during Stages 1 and 2 for structure replacement per Standard 701321. The Bureau of Operations shall be notified of the width of the open lane 14 calendar days prior to the application of stage construction.

The Contractor shall follow the sequence of construction shown in the plans. If the Contractor must deviate from this schedule to permit the construction of this section with the least inconvenience to the traveling public, written permission must be granted by the Engineer.

Suitable Access: All commercial, private, and field entrances along the mainline and local roads, which are part of this improvement, shall have suitable access, as determined by the Engineer, at all times during construction of this project. Estimated quantities of aggregate surface course for temporary access (Aggregate Surface Course, Type B) have been included in the plans for this purpose. The Engineer will determine the amount and when to place the aggregate. The Contractor shall begin placement of the aggregate within 2 hours of notice to proceed from the Engineer or he/she will be liable for liquidated damages in accordance with Article 108.09 of the Standard Specifications.

Aggregate surface course for temporary access (Aggregate Surface Course, Type B) shall also be placed on side roads when necessary access is required as determined by the Engineer, such as when long term wet weather conditions exist. In this case, the Contractor shall begin placement of the aggregate within 24 hours of notice to proceed from the Engineer or he/she will be liable for liquidated damages in accordance with Article 108.09 of the Standard Specifications.

Access to Commercial and Residential Properties: All commercial, private, and field entrances shall have all weather access at all times and be stage constructed. All weather access shall be a minimum of 10.0 ft wide. The Contractor may not deviate form this provision, except when he/she has written permission from the owner/tenant to cut off access to their property for a specific period of time.

Allowable Side Road Closures: Side roads/streets will not be completely closed. At least one lane of traffic will be open at all times. Any side road improvements are required to be stage constructed.

County Line Road: County Line Road is the only side road that may be completely closed to through traffic under Standards BLR 21 and BLR 22. The Contractor shall provide suitable access during construction, and the road may only be closed for five (5) calendar days.

SN 069-0001: Replacement of this structure shall be constructed while traffic is maintained on a temporary widened pavement, as detailed in the plans. The double box culvert shall be stage constructed while traffic is maintained on the temporary pavement. Traffic control and protection shall be as detailed in the plans.

SN 069-0002: Replacement of this structure shall be stage constructed with one lane open to traffic in each direction at all times. Traffic control and protection shall be as detailed in the plans.

Traffic Control and Protection Standard 701321: Detector loop lead-in may be mounted at 3 ft above ground along right-of-way and marked with orange or red paint or ribbon for easy recognition.

Each detector loop shall have a separate detector amplifier and shall be wired to a separate detector channel at the traffic signal cabinet.

The front detector loop shall have a minimum of 2 ft horizontal clearance between the detector loops.

Additional barricades, drums, or cones, required by the Engineer to control traffic when relocation for Contractor access is used, shall be considered incidental to the contract, and no additional compensation will be allowed.

A temporary pavement marking shall be required in addition to temporary pavement markers for the outside edges of Stage 1 and 2 traffic lanes. White marking tape shall be used.

This work will be measured and paid for according to Articles 701.07 and 701.08 of the Standard Specifications, except barrier wall reflectors will not be paid for separately but shall be included with Traffic Control and Protection Standard 701321 per each.

Traffic Control and Protection, Standard 701201 and 701306: This traffic control and protection shall be used during bituminous resurfacing, milling operations, placing aggregate, or any other operations which require traffic to be reduced to one lane two-way traffic on IL 78 as shown in the standard located in the plans.

Traffic Control and Protection Standard 701326: This traffic control and protection standard shall be used during construction which involve excavation and other work adjacent to an existing edge of pavement which has traffic on it and as shown in the standard located in the plans. Traffic Control Surveillance shall be provided where large drop-offs occur at the edge of pavement, as directed by the Engineer.

Measurement and Payment for Traffic Control and Protection: Traffic Control and Protection Standards 701201, 701306, 701326, BLR 21, and BLR 22 will be measured on a lump sum basis and paid for at the contract lump sum price for TRAFFIC CONTROL AND PROTECTION STANDARD 701201, TRAFFIC CONTROL AND PROTECTION STANDARD 701306, TRAFFIC CONTROL AND PROTECTION STANDARD 701326, TRAFFIC CONTROL AND PROTECTION STANDARD BLR 21, and TRAFFIC CONTROL AND PROTECTION STANDARD BLR 22.

Traffic Control and Protection Standard 701321 will be measured at each location specified on an each basis and paid for at the contract unit price each for TRAFFIC CONTROL AND PROTECTION STANDARD 701321. Each location, no matter how many setups are required, will be considered as one each, as shown in the schedule of quantities in the plans.

Traffic Control Surveillance will be measured and paid for by Calendar Day and as specified in the Standard Specifications.

Temporary bridge traffic signals will be paid for separately.

All permanent signing will be paid for separately.

All pavement marking will be paid for separately.

All other traffic control and protection required for the completion of this improvement will not be paid for separately but will be considered as part of the unit bid prices for the pay item included in the contract.

COMPLETION DATE

All work required in this contract shall be completed by November 15, 2004, with all seeding completed by the interim completion date of October 1, 2004. Fifteen (15) extra working days will be allowed for aggregate shoulders, pavement marking line, and raised reflective pavement markers.

If the Contractor fails to complete the required work by the completion date(s) or within the number of additional working days stated herein, he/she shall be liable to the Department for liquidated damages in accordance with Article 108.09 of the Standard Specifications and any other additional special provision which may be attached herein which supplements Article 108.09. The Contractor will also be liable for additional items of work made necessary by not meeting the completion date(s) or additional working days allowed. Such items include, but are not restricted to, temporary pavement marking, temporary erosion control, and temporary seeding.

PAYROLLS AND PROCEDURES

Effective: February 5, 1975
Revised: November 7, 1986, January 14, 1994, and June 2001

The prime Contractor and each Subcontractor shall submit a weekly certified original and one copy of their companies payroll directly to the District Engineer.

Payrolls must be received within seven (7) days of the payroll ending period.

Payroll data shall be submitted on Payroll Form RE 48 or an approved facsimile to include every person paid by a Contractor or Subcontractor in any manner for his or her labor in the construction, prosecution, completion, or repair of this public work is employed and receiving “wages,” regardless of any contractual relationship alleged to exist between him/her and the real employer.

Payroll data shall include all persons employed on the job site.

The following employee codes are to be used to identify each individual on the payroll:

A. **Gender:** **M** – Male **F** – Female

B. **Ethnic Group:** **1** – White **2** – Black **3** – Hispanic
4 – American Indian/Alaskan Native **5** – Asian/Pacific Islander

C. **Work Classification:**

OF – Officials	**SU** – Supervisors	**FO** – Foremen	**CL** – Clerical
CA – Carpenters	**EO** – Operators	**ME** – Mechanics	**TD** – Truck Drivers
IW – Ironworkers	**PA** – Painters	**CM** – Cement Masons	**EL** – Electricians
PP –Pipefitters	**TE** – Technical	**LA** – Laborers	**OT** - Other

D. **Employee Status:** **O** – Owner Operator **J** – Journeyman **C** – Company
A – Apprentice **T** – Trainee

Payroll data shall be submitted by the prime Contractor and each Subcontractor for each consecutive week from the start to the completion of <u>their</u> work. When there has been no activity during a work week, a payroll is still required to be sent to the District Engineer with the appropriate box ("No Work," "Suspended," "Completed") checked at the bottom of the Payroll Form RE 48. <u>DO NOT</u> check any of these boxes when payroll data is being reported on the payroll.

The Department of Transportation is requesting disclosure of information necessary to accomplish the statutory purpose as outlined under 23CFR, part 230, and 41CFR, part 60.4, and the Illinois Human Rights Act. Disclosure of this information is REQUIRED. Failure to comply with this special provision may result in the withholding of payments to the Contractor and/or cancellation, termination, or suspension of the contract in whole or part.

Compliance with this Special Provision shall be considered incidental to the cost of the contract and no additional compensation will be allowed for any costs incurred.

STATUS OF UTILITIES TO BE ADJUSTED

The following utilities are involved in this project. The utility companies have provided the estimated dates.

Name & Address of Utility	Type	Location	Estimated Date of Relocation Completed
Verizon North (possible) 330 West Beecher Street Jacksonville, IL 62650 Contact: Mr. Charles Jenkins Phone: (217) 243-0211	Telephone	Throughout location	During construction

The above represents the best information of the Department and is only included for the convenience of the bidder. The applicable provisions of Sections 102, 103, and Articles 105.07, 107.20, 107.31, and 108.02 of the Standard Specifications for Road and Bridge Construction shall apply.

The estimated utility relocation dates should be part of the progress schedule submitted by the Contractor. If any utility adjustments or relocations have not been completed by the above dates specified and when required by the Contractor's operations after these dates, the Contractor should notify the Engineer in writing. A request for an extension of time will be considered to the extent the Contractor's critical path schedule is affected.

CONSTRUCTION LAYOUT RESPONSIBILITY

This special provision is included in addition to Check Sheet #11 of the recurring special provisions, special provision for Construction Layout Stakes, to clearly define the responsibility of the Contractor for construction layout.

It shall additionally be the responsibility of the Contractor to check the plans to assure the plans are accurate and that all roadway elements will fit the final proposed slopes. When the Contractor determines a portion of the plans is incorrect or a portion does not agree with another portion, he/she shall contact the Engineer to have the problem resolved and additional work, if any, agreed upon. The Contractor shall not proceed until authority is received from the Engineer and problems resolved. The Engineer/Contractor shall contact the District Studies and Plans Section if need be.

The Contractor shall set all horizontal control points at the end of construction and provide cross ties in a hardback survey book to the Engineer.

The Contractor shall also set and provide the Engineer with a list of final benchmarks in a hardback survey book at the end of construction for future vertical control.

No additional compensation will be allowed for complying with this special provision, but all costs shall be included in the contract lump sum price for CONSTRUCTION LAYOUT.

BITUMINOUS SURFACE REMOVAL, VARIABLE DEPTH

This work shall consist of the bituminous surface removal of the existing pavement, as shown on the plans and as directed by the Engineer, in accordance with applicable portions of Section 440 of the Standard Specifications.

On normal crown sections, the surface removal will be nominal 19mm at centerline and variable depth cold milling at the edge of pavement to correct the slope of existing pavement, as shown on the plans. The depth of milling shall not exceed the existing bituminous surface thickness.

The surface removal will be as shown on the entrance and side road details. The depth of milling shall not exceed the existing bituminous surface thickness.

This work shall also include sawing the existing pavement to obtain a satisfactory butt joint at locations indicated on the plans and the removal and disposal of the bituminous concrete surface.

All material, equipment, and labor necessary to complete this work, as specified above and shown in the plans, will be included in the contract unit price bid per square meter for BITUMINOUS SURFACE REMOVAL, VARIABLE DEPTH

BITUMINOUS SURFACE REMOVAL – BUTT JOINT

This work shall be done as shown on the plans and in accordance with Articles 406 and 440 of the Standard Specifications and as follows:

The butt joints to be constructed for the proposed bituminous concrete surface course shall not be constructed until all of the bituminous binder courses have been completed. After the completion of the binder courses, the Engineer shall determine when the remaining but joints can be constructed. No butt joints shall be left uncovered with bituminous surface over the winter shutdown or other long periods of inactivity.

This work shall be paid for at the contract price per square yard for BITUMINOUS SURFACE REMOVAL – BUTT JOINT.

PAVEMENT STATIONING NUMBERS AND PLACEMENT

The Contractor shall provide labor and materials required to imprint pavement station numbers in the finished surface of the pavement and /or overlay. The numbers shall be approximately 20 mm (3/4 inch) wide, 125 mm (5 inches) high and 15 mm (5/8 inch) deep.

The pavement station numbers shall be installed as specified herein:

Interval – 100 meters (metric stationing) or 250 feet (English stationing)

Bottom of Numbers -- 150 mm (6 inches) from the inside edge of the pavement marking and/or resurfacing joint.

Location:

- 2-Lane Pavements – At center line in direction of increasing stations.
- 3 and 5-Lane Pavements – Left edge of center lane in direction of increasing stations.
- Multi-Lane Divided Roadways – Outside edge of pavement in both directions.
- Ramps – Along baseline edge of pavement.

Position – Stations shall be placed so they can be read from the adjacent shoulder.

Format – Metric [English] pavement stations shall use this format (XX+XOO [XO”]) where X represents the pavement station.

This work will not be paid for separately, but will be considered included in the cost of the associated pavement and/or overlay pay items.

FURNISHING AND ERECTING RIGHT-OF-WAY MARKERS

Effective: November 1, 1984

This item consists of furnishing and erecting right-of-way markers in accordance with Section 666 of the Standard Specifications except as follows: The Contractor shall furnish and erect the right-of-way markers as soon as the locations have been designated by the Engineer. The Contractor shall take adequate precautions in preserving and protecting the markers after they have been erected. Markers which become displaced or damaged shall be replaced at the Contractors expense.

TRAFFIC BARRIER TERMINAL, TYPE 1

This work consists of furnishing and installing Traffic Barrier Terminals, Type 1 (BLR) in accordance with Section 633 of the Standard Specifications and Highway Standard BLR 23-1 and as shown on the plans.

The work of furnishing and installing the Traffic Barrier Terminals, Type 1 will be paid for at the contract unit price Each for TRAFFIC BARRIER TERMINAL, TYPE 1.

CONCRETE GUTTER, TYPE A (MODIFIED)

This work shall consist of the construction of concrete gutter of the type specified in accordance with the details in the plans and Section 606 of the Standard Specifications. Since the gutter will be constructed against a bituminous shoulder, no tie bars will be required.

This work will be paid for at the contract unit price per each for CONCRETE GUTTER TYPE A (MODIFIED), which price shall include payment for furnishing and installing all reinforcement bars as required.

CLASS SI CONCRETE (OUTLET)

This work shall consist of constructing concrete gutter inlets, outlets, and entrances in accordance with the details and at the locations shown in the plans. All work shall meet the requirement of the Section 606 of the Standard Specifications.

This work will be paid for at the contract unit price per cubic meter for CLASS SI CONCRETE (OUTLET) which price shall include payment for furnishing and installing all reinforcement bars and welded wire fabric as required.

GUTTER OUTLET REMOVAL

This work shall consist of the removal and disposal of 11 meters of gutter outlet, at the locations shown on the plans and as directed by the Engineer, and shall be done in accordance with the applicable portions of Section 440 of the Standard Specifications.

This work will be paid for at the contract unit price per meter for GUTTER OUTLET REMOVAL, which price shall include the removal and disposal of the existing gutter outlet.

REMOVE EXISTING CULVERTS

This work shall consist of the removal and disposal of existing pipe culverts, including any headwalls or end sections, at the locations shown on the plans and as directed by the Engineer, and shall be done in accordance with the applicable portions of Section 501 of the Standard Specifications.

This work will be paid for at the contract unit price per meter for REMOVING EXISTING CULVERTS, and no additional compensation will be allowed due to the various sizes and types.

CONCRETE COLLAR

This work shall consist of constructing reinforced concrete collars to connect the proposed reinforced concrete culvert pipe or precast concrete box culvert extensions to the existing box culverts in accordance with the details and at the locations shown in the plans.

The Class SI Concrete and reinforcement bars shall meet the requirements of Section 1020 and 508 of the Standard Specifications.

The Contractor shall furnish and install 20mm diameter expansion bolts as shown on the plans and shall meet the requirements of Article 1006.09 of the Standard Specifications. The expansion bolts shall consist of self-drilling expansion shields and 20mm diameter hooked bolts.

This work will be paid for at the contract unit price per cubic meter for CONCRETE COLLAR which price shall include payment for all labor and equipment to construct the collar.

Expansion bolts will be paid for at the contract unit price per each for EXPANSION BOLTS M20.

Reinforcement bars will be paid for at the contract unit price per kilogram for REINFORCEMENT BARS.

TEMPORARY SHEET PILING

Effective: September 2, 1994 ***Revised: January 1, 2002***

Description: This work shall consist of furnishing, driving, adjusting for stage construction when required and subsequent removal of the sheet piling according to the dimensions and details shown on the plans and according to the applicable portions of Section 512 of the Standard Specifications.

This work shall also include furnishing, installing and subsequent removal of all struts, tiebacks, wales, miscellaneous steel shapes, plates and connecting hardware as required for proper completion of this work.

General: When the Contractor is required to provide a design or when he/she elects to vary from the design requirements to less than those shown on the plans, the design and details shall be submitted to the Engineer for approval. The calculations shall be prepared and sealed by an Illinois Licensed Structural Engineer. This approval will not relieve the Contractor of responsibility for the safety of the excavation. Approval shall be contingent upon acceptance by all involved utilities and/or railroads.

The sheet piling shall be steel sheet piling and may be new or used material, at the option of the Contractor. The sheet piling shall have a minimum section modulus as shown on the plans or in the approved design, with a minimum yield strength of 265 MPa (38.5 ksi) unless otherwise specified. The sheeting, used by the Contractor, shall be identifiable and in good condition free of bends and other structural defects. The Contractor shall furnish a copy of the published sheet pile section properties to the Engineer for verification purposes. The Engineer's approval will be required prior to driving any sheeting. All driven sheeting not approved by the Engineer shall be removed at the Contractor's expense.

Construction: The Contractor shall verify locations of all underground utilities before driving any sheet piling. Any disturbance or damage to existing structures, utilities or other property, caused by the Contractor's operation, shall be repaired by the Contractor in a manner satisfactory to the Engineer at no additional cost to the Department. The sheet piling shall be driven to or below the tip elevations specified on the plans or according to the Contractor's approved design, or as directed by the Engineer. The sheet piling shall be in place prior to commencing any related excavation. The Contractor shall not excavate below the limits of excavation shown on the plans without the prior permission of the Engineer. The sheet piling shall remain in place until the Engineer determines it is no longer required.

The sheet piling shall be removed and disposed of by the Contractor when directed by the Engineer. When allowed, the Contractor may elect to cut off a portion of the sheet piling leaving the remainder in place. The remaining sheet piling shall be a minimum of 300 mm (12 in.) below the finished grade or as directed by the Engineer. Removed sheet piling shall become the property of the Contractor.

Method of Measurement: Temporary sheet piling will be measured in place in square meters (square feet). Sheet piling that is cut off or driven beyond those dimensions shown on the plans or as detailed in the approved Contractor's design will not be measured for payment.

Basis of Payment: This work will be paid for at the contract unit price per square meter (square foot) for TEMPORARY SHEET PILING.

STONE DUMPED RIPRAP WITH CONCRETE SLURRY

This work shall consist of pumping a concrete slurry on the stone dumped riprap in the ditches at locations as called out in the plans. The slurry shall be applied in a manner that fills the voids but leaves enough stone riprap exposed to act as an energy dissipater. The concrete slurry mixture shall meet the requirements of the structural grout described in Section 285 of the Standard Specifications and shall be applied to the stone riprap by use of mixing and pumping equipment. The equipment used shall meet the requirements of Article 285.03 of the Standard Specifications. The construction requirements for placing the stone and the material requirements for the stone shall be in accordance with the applicable portions of Section 281 of the Standard Specifications.

This work will be paid for at the contract unit price per square meter for STONE DUMPED RIPRAP WITH CONCRETE SLURRY.

STONE DUMPED RIPRAP

Description: This work shall consist of furnishing, transporting, and placing riprap in ditches and channels at the locations shown in the plans.

Construction Requirements: This work shall be done in accordance with Section 281 of the Standard Specifications, with the following modifications:

Gradation	Minimum Thickness	Bedding Thickness
RR3	12"	----
RR4	12"	6"
RR5	18"	6"

Installation of filter fabric shall be required under gradation RR4 and RR5. Filter fabric shall be required under gradation RR 3 when it is placed in highly erodable soils as determined by the Engineer. Filter fabric shall be furnished and installed in accordance with Section 282 of the Standard Specifications.

Method of Measurement: Riprap shall be measured for payment in tons in a manner similar to the method described in Article 311.08, except that no deduction will be made for moisture content. Bedding will not be measured as part of riprap.

Basis of Payment: This work will be paid for at the contract unit price per metric ton for STONE DUMPED RIPRAP of the class and gradation specified. Excavation and aggregate bedding will not be paid for separately, but the cost shall be considered incidental to the cost of riprap.

Filter fabric will be paid for as specified in Section 282 of the Standard Specifications.

CONCRETE BOX CULVERTS

This work shall consist of the construction of cast-in-place concrete box culvert extensions at both ends of the double box culvert located at station 18+664.055 in accordance with the applicable portions of Section 540 of the Standard Specifications. This work shall also include temporary bracing of the existing wing walls prior to removal of the existing top slab, headwall and walls. The Contractor shall design and construct a bracing system to safely support the existing wing walls during construction of the new culvert barrel and wing walls. The design shall be submitted to the Engineer and approved prior to construction. The bracing system shall be removed during construction of the embankment behind the new wing walls. The existing wing walls shall be left in place.

The work will be paid for at the contract unit price per cubic meter for CONCRETE BOX CULVERTS which price includes the cost to furnish, install and remove the temporary bracing system described above.

EARTH EXCAVATION (WIDENING)

This work consists of preparing the proposed subgrade including widening for the proposed pavement and bituminous shoulder or concrete curb and gutter after the existing shoulder is removed and finishing final grading of the foreslope after the improvement has been constructed as shown in the plans.

The proposed grading of the subgrade for the proposed improvement after the existing shoulder is removed shall be graded according to the plans, as directed by the Engineer and in accordance with applicable portions of Section 301 of the Standard Specifications.

The proposed improvements as detailed in the plans shall be constructed in accordance with applicable portions of Sections 355, 356, 482 and 606 of the Standard Specifications and as directed by the Engineer.

After the improvement has been constructed, the earth removed from the preparation of the subgrade and widening shall be graded against the constructed shoulder or curb and excess excavation wasted on the foreslope, as directed by the Engineer.

This work will be measured and paid in accordance with Articles 202.07 and 202.08. The unit bid price per cubic meter for EARTH EXCAVATION (WIDENING) shall also include all labor and equipment costs involved in preparing the subgrade and for final grading as specified above. No additional compensation will be allowed.

TEMPORARY EROSION CONTROL

This work shall consist of furnishing and erecting temporary erosion control systems as shown in Standard 280001 of the plans or as directed by the Engineer at locations designated by the Engineer and in accordance with the applicable portions of Section 280 of the Standard Specifications.

The cost of furnishing, installing, and removing temporary ditch checks for erosion control will be paid for at the contract unit price per each for TEMPORARY DITCH CHECKS, which price shall include any excavation or embedment, staking the bales in place, or any other installation requirements by the Engineer.

The cost of furnishing and removing inlet and pipe protection (temporary ditch checks and aggregate ditch checks) will be paid for at the contract unit price each for INLET AND PIPE PROTECTION, which price shall include any excavation or embedment, staking the bales in place, or any other installation requirements by the Engineer.

The cost of furnishing, installing, and removing (only if directed by the Engineer) stone dumped riprap ditch checks for temporary erosion control will be paid for at the contract unit price per ton for AGGREGATE (EROSION CONTROL), which price shall include any excavation required for embedment, furnishing the riprap material to the size specified by the Engineer, placing the riprap to the satisfaction of the Engineer, and removing portions or all of the ditch checks as directed by the Engineer.

The cost of excavation for the construction of sediment basins will be paid for at the contract unit price per cubic meter for EARTH EXCAVATION FOR EROSION CONTROL, which price shall include removal, hauling and disposal of material to a non-erodible location.

TEMPORARY SEEDING

This work shall consist of preparing a seed bed, seeding with Seeding Class 7 mixture, and mulching by Method 1 at locations designated by the Engineer to prevent possible erosion in accordance with applicable portions of Sections 250 and 251 of the Standard Specifications.

The areas to be seeded will be determined by the Engineer and the Contractor shall perform this seeding within five calendar days of notice to proceed from the Engineer or he/she will be liable to the Department for each day of overrun in accordance with Article 108.10 of the Standard Specifications for Failure to Complete the Work on Time. The minimum area directed by the Engineer to be seeded by the Contractor will be at least 5 acres per notice.

The seed bed preparation, seeding application, and seeding method shall be in accordance with Section 250 of the Standard Specifications. The main areas to be seeded will be on sideslopes and in ditches that are temporarily completed and are not anticipated to be disturbed for a period of time. No fertilizing will be required for temporary seeding.

All seeding areas will not be required to be mulched. The Engineer in the field will designate any areas to be mulched by Method 1 and the rate of application. Mulching shall be completed in accordance with Method 1 of applicable portions of Section 251 of the Standard Specifications.

Temporary seeding and mulching will be measured for payment in accordance with Articles 250.08 and 251.05 of the Standard Specifications. Temporary seeding will be paid for at the contract unit price per hectare for SEEDING, CLASS 7 and temporary mulching will be paid for at the contract unit price per hectare for MULCH, METHOD 1. No other compensation will be allowed for performing these operations.

The Contractor shall understand estimated quantities are included in the plans to establish a contract unit price. The Engineer has the right to increase, decrease, or totally delete these quantities in the contract.

TRANSVERSE DRAINS

Effective: July 23, 2003

This work consists of constructing transverse drains at locations shown in the plans or directed by the Engineer. Transverse drains shall be constructed according to the details shown in the plans and applicable portions of Section 601 of the Standard Specifications.

Perforated, corrugated pipe shall have a 100 mm inside diameter and shall meet the requirements of Article 1040.11. Non-perforated outlet pipe shall have a 100 mm inside diameter and shall meet the requirements of Article 1040.12. Smooth interior PVC or PE pipe may be substituted. Perforated pipe shall not be encased in a fabric envelope.

Geotechnical fabric shall meet the requirements of Article 1080.05 and shall consist of non-woven, needle punched material. Backfill and bedding aggregate shall consist of CA-16 gravel or crushed gravel reasonably free of objectionable deleterious material. Crushed limestone shall not be allowed.

This work shall be paid for at the contract unit price each for TRANSVERSE DRAINS, COMPLETE, which price includes all labor, material, and equipment to construct the transverse drain including excavation, fabric, pipe, aggregate, and outlet headwall.

ROCKFILL – FOUNDATION

Effective: June 25. 2003

This work consists of constructing a layer of rockfill below culverts or spread footings having unstable or unsuitable soil conditions. This work shall be done as shown on the plans or as directed by the Engineer. When shown on the plans, the rockfill limits and thickness shall be confirmed by the Engineer prior to excavating below the theoretical top of rockfill line.

Materials shall meet the requirements of the following Articles of the Standard Specifications:

CA-6 and CA-7	....	1004.04
Rockfill	....	1005.01
Geotextile Fabric	....	1080.02[a]

[a] Geotextile Fabric shall be woven, with a minimum weight of 200 g/m² for rockfill layers exceeding 300 mm thick.

All rockfill shall be well graded. The gradation of rockfill shall be selected based on layer thickness as shown below:

Less than or equal to 300 mm	.....	Gradations with a max size of 100 mm[b]
Greater than 300 mm	....	Primary Crusher Run
Greater than 1 m	.....	Primary Crusher Run or Shot Rock (450 mm max.)

[b] Gradations with a maximum size of 50 mm or smaller shall have less than 6% passing the 0.075 mm sieve.

Excavation shall be performed according to Section 202 of the Standard Specifications. Excavated material may be placed in fills according to Article 202.03 with the approval of the Engineer.

When shown on the plans or directed by the Engineer, geotechnical fabric shall be placed according to Article 210.03. Rockfill shall be placed on fabric according to Article 210.04. When no fabric is required, the method of rockfill placement shall be approved by the Engineer. Rockfill shall be capped according to application as shown below:

Spread Footing	...	100 to 150 mm CA-6
Cast-In-Place Box Culverts	...	100 to 150 mm CA-7
Pre-Cast Box Culverts	...	Porous Granular Bedding Material (Article 540.06)

In spread footing applications, the CA-6 cap shall be compacted to the satisfaction of the Engineer. No compaction of rockfill is required for culvert applications.

This work shall be measured and paid for at the contract unit price per metric ton for ROCKFILL - FOUNDATION, and per square meter for GEOTECHNICAL FABRIC FOR GROUND STABILIZATION. The contract price for ROCKFILL-FOUNDATION shall include excavation, aggregate materials, aggregate material placement, and placement of excavated materials within right-of-way or disposal off right-of-way. Excavation will not be measured or paid for separately or as part of EARTH EXCAVATION. For precast concrete box culverts, porous granular bedding material and the excavation required for bedding shall be paid for according to Article 540.08.

EMBANKMENT

Effective: June 2002

Embankments shall be constructed according to Section 205 of the Standard Specifications, except as modified by this Special Provision.

When embankments are to be constructed on hillsides or existing slopes which are steeper than 3H:1V, steps shall be cut into the existing slope as shown in the plans or as directed by the Engineer.

All material proposed for use in embankment construction shall be approved by the Engineer. Soils exhibiting the following properties shall not be allowed:

Standard Dry Density (AASHTO T 99) less than 1450 kg/m³.
Organic Content (AASHTO T 194) greater than 10 percent.
Liquid Limit (AASHTO T 89) greater than 60.

Soils exhibiting the following properties shall be restricted to the interior of the embankment:

Less than 35% passing the 0.075 mm sieve.
Liquid Limit (AASHTO T 89) greater than 50 but less than 60.
Plasticity Index (AASHTO T 90) less than 12.

These restricted soils shall be encapsulated by one to two feet of unrestricted soil as directed by the Engineer. The thickness of encapsulation shall not include topsoil. The Engineer may restrict or prohibit the use of materials other than those identified above, which exhibit potential for significant erosion or excessive volume change.

Where lime modified soil is shown on the plans, materials placed in the top 600 mm of embankments shall have a clay content greater than or equal to 20% over the width of improved subgrade. Clay is defined according to AASHTO M 145. Clay content shall be determined according to AASHTO T 88.

The standard laboratory density shall be the maximum dry density determined according to AASHTO T 99 (Method C) or AASHTO T 272.

The moisture content of all embankment lifts shall not exceed 120% of the optimum moisture determined according to AASHTO T 99 (Method C) or AASHTO T 272. If embankment lifts are unstable after achieving the required density, the Contractor shall reprocess and compact the unstable material as directed by the Engineer. The Engineer may reduce the allowable moisture content to correct or prevent stability problems during embankment construction. Embankment placed adjacent to a structure shall not contain more than 110% of the optimum moisture content as described in Article 205.05 of the Standard Specifications.

This work will not be paid for separately, but shall be considered included in the unit prices for Earth Excavation, Borrow, and/or Furnished Excavation.

AGGREGATE SUBGRADE

Effective: June 25, 2003

This work consists of constructing an aggregate improved subgrade with a thickness not exceeding 300 mm. This work shall be done as shown on the plans or as directed by the Engineer.

Aggregate materials shall meet the requirements of Article 1004.04 of the Standard Specifications. Aggregate gradation shall be CA-6.

Prior to placing aggregate, the ground shall be prepared according to Article 301.03, except compaction shall be to the satisfaction of the Engineer. In cut sections, the Contractor shall perform the steps described in Article 301.03 to achieve an immediate bearing value (IBV) not less than 3. IBV will be determined using the dynamic cone penetrometer according to Illinois Test Procedure 401 or the static cone penetrometer according to Illinois Test Procedure 402. Areas that do not achieve the required IBV shall be treated as directed by the Engineer.

Aggregate materials shall be placed and compacted according to Article 311.05 (a) and 311.05(c).

This work shall be measured and paid for and the contract unit price per metric ton for AGGREGATE SUBGRADE.

FABRIC REINFORCED ELASTOMERIC MAT

Effective: July 14,2000 Revised: September 12, 2003

Description. This work shall consist of furnishing and installing the fabric reinforced elastomeric mat as shown on the plans and as directed by the Engineer.

Materials. The elastomeric material requirements for the reinforced mat shall be according to the following:

The Elastomer Compound for the mat shall be according to AASHTO M 251 for Polychloroprene “50 duro”, except the tensile strength shall be 10.3 MPa (1500 psi) minimum or it shall be (EPDM) ethylene propylene diene monomer according to Article 1052.02 of the Standard Specifications.

The composite of the fabric and elastomer shall have a minimum tensile strength of 122.6 x 122.6 N/mm (700 x 700 lb/in) according to ASTM D 378.

The minimum elongation at ultimate tensile strength shall be 30 percent according to ASTM D 412.

The minimum thickness of the reinforced mat shall be 3 mm (1/8 in.).

Threaded studs, washers and nuts shall be according to ASHTO M 164. Flattening plates shall be according to AASHTO M 270M, Grade 250 (M 270,Grade 36).

Method of Measurement. The fabric reinforced elastomeric mat and all hardware necessary to install the mat will not be measured for payment but shall be included in the concrete pay item involved.

TEMPORARY SOIL RETENTION SYSTEM

Effective: December 30, 2002

Description. This work shall consist of designing, furnishing, installing, adjusting for stage construction when required and subsequent removal of the temporary soil retention system according to the dimensions and details shown on the plans and in the approved design submittal.

General. The temporary soil retention system shall be designed by the Contractor as a minimum, to retain the exposed surface area specified in the plans or as directed by the Engineer.

The design calculations and details for the temporary soil retention system proposed by the Contractor shall be submitted to the Engineer for approval. The calculations shall be prepared and sealed by an Illinois Licensed Structural Engineer. This approval will not relieve the Contractor of responsibility for the safety of the excavation. Approval shall be contingent upon acceptance by all involved utilities and/or railroads.

Construction. The Contractor shall verify locations of all underground utilities before installing any of the soil retention system components or commencing any excavation. Any disturbance or damage to existing structures, utilities or other property, caused by the Contractor's operation, shall be repaired by the Contractor in a manner satisfactory to the Engineer at no additional cost to the Department. The soil retention system shall be installed according to the Contractor's approved design, or as directed by the Engineer, prior to commencing any related excavation. If unable to install the temporary soil retention system as specified in the approved design, the Contractor shall have the adequacy of the design re-evaluated. Any reevaluation shall be submitted to the Engineer for approval prior to commencing the excavation adjacent to the area in question. The Contractor shall not excavate below the maximum excavation line shown in the approved design without the prior permission of the Engineer. The temporary soil retention system shall remain in place until the Engineer determines it is no longer required.

The temporary soil retention system shall be removed and disposed of by the Contractor when directed by the Engineer. When allowed, the Contractor may elect to cut off a portion of the temporary soil retention system leaving the remainder in place. The remaining temporary soil retention system shall be removed to a depth which will not interfere with the new construction, and as a minimum, to a depth of 300 mm (12 in.) below the finished grade, or as directed by the Engineer. Removed system components shall become the property of the Contractor.

When an obstruction is encountered, the Contractor shall notify the Engineer and upon concurrence of the Engineer, the Contractor shall begin working to break up, push aside, or

remove the obstruction. An obstruction shall be defined as any object (such as but not limited to, boulders, logs, old foundations etc.) where it's presence was not obvious or specifically noted on the plans prior to bidding, that cannot be driven or installed through or around, with normal driving or installation procedures, but requires additional excavation or other procedures to remove or miss the obstruction.

Method of Measurement. The temporary soil retention system furnished and installed according to the Contractor's approved design or as directed by the Engineer will be measured for payment in place, in square meters (square feet). The area measured shall be the vertical exposed surface area envelope of the excavation supported by temporary soil retention system.

Any temporary soil retention system cut off, left in place, or installed beyond those dimensions shown on the contract plans or the approved contractor's design without the written permission of the Engineer, shall not be measured for payment but shall be done at the contractor's own expense.

Basis of Payment. This work will be paid for at the contract unit price per square meter (square foot) for TEMPORARY SOIL RETENTION SYSTEM.

Payment for any excavation, related solely to the installation and removal of the temporary soil retention system and/or its components, shall not be paid for separately but shall be included in the unit bid price for TEMPORARY SOIL RETENTION SYSTEM. Other excavation, performed in conjunction with this work, will not be included in this item but shall be paid for as specified elsewhere in this contract.

Obstruction mitigation shall be paid for according to Article 109.04 of the Standard Specifications.

PRECAST CONCRETE STRUCTURES

Effective: September 12, 2003

Revise the tables for Maximum Allowable Dimensional Tolerances For Precast, Prestressed Concrete I-Beams and Bulb T-Beams in Article 504.06(d) to read:

Maximum Allowable Dimensional Tolerances For
Precast, Prestressed Concrete I-Beams
and Bulb T-Beams
(Metric)

mm.

Depth (flanges, web and fillets) ..... ± 5
Depth (overall) ..... + 5 to – 3
Width (flanges and fillets) ..... ± 5
Width (web) ..... + 5 to – 3
Length ..... + 3 per 3 m, Max. + 15 to – 20
Square Ends (deviation from square) .....± 5
Skew Ends (deviation from tangent offset) .....± 5
Side Insert (spacing between centers of inserts
and from the centers of inserts to the ends of the beams) ..... ± 15
Bearing Plates (spacing between the centers of
bearing plates) ..... ± 15
Bearing Plate (spacing between the centers of
Bearing plates to the ends of the beams) ..... ± 5
Bearing Plate or Bearing Area (variation from a
true horizontal plane or from a plane surface
when tested with a straightedge) ..... ± 2
Stirrup Bars (extension above top of the beam) ..... 0 to – 10
Stirrup Bars longitudinal spacing
Within a distance equal to the depth of the member
and measured from the end of the member .....+ 25
In all other locations.....+ 50

The number of stirrups shall not be less than the required number in each length. Additional stirrups may be added when the maximum allowable tolerance is exceeded provided the minimum clearance between stirrups is not less than 50 mm.

End Stirrup Bars - not more than 50 mm from the end of the beam
Horizontal Alignment (deviation from a straight line parallel
to the centerline of the beam) ..... ± 3 per 3 m, Max. ± 30

Maximum Allowable Dimensional Tolerances For
Precast, Prestressed Concrete I-Beams
and Bulb T-Beams
(English)

In.

Depth (flanges, web and fillets) ..... ± 1/4
Depth (overall) ..... + 1/4 to - 1/8
Width (flanges and fillets) .....± 1/4
Width (web) ..... + 1/4 to - 1/8
Length ..... + 1/8 per 10', Max. + 1/2 to - 3/4
Square Ends (deviation from square) ..... ± 1/4
Skew Ends (deviation from tangent offset) ..... ± 1/4
Side Insert (spacing between centers of inserts
and from the centers of inserts to the ends of the beams) ..... ± 1/2
Bearing Plates (spacing between the centers of
bearing plates) ..... ± 1/2
Bearing Plate (spacing between the centers of
bearing plates to the ends of the beams) ..... ± 1/4
Bearing Plate or Bearing Area (variation from a
true horizontal plane or from a plane surface
when tested with a straightedge) ..... ± 1/16
Stirrup Bars (extension above top of the beam) .....0 to – 3/8
Stirrup Bars longitudinal spacing
Within a distance equal to the depth of the member
and measured from the end of the member .....+ 1
In all other locations.....+ 2

The number of stirrups shall not be less than the required number in each length. Additional stirrups may be added when the maximum allowable tolerance is exceeded provided the minimum clearance between stirrups is not less than 2 in.

End Stirrup Bars - not more than 2 in. from the end of the beam
Horizontal Alignment (deviation from a straight line parallel
to the centerline of the beam) ..... ± 1/8 per 10', Max. ± 1 1/4

BITUMINOUS BASE COURSE / WIDENING SUPERPAVE (BDE)

Effective: April 1, 2002 Revised: January 1, 2003

Description. This work shall consist of constructing bituminous base course Superpave and bituminous concrete base course widening Superpave according to Sections 355 and 356 respectively, of the Standard Specifications and the special provision, "Quality Control/Quality Assurance of Bituminous Concrete Mixtures" except as modified herein.

Revise Article 355.02(d) of the Standard Specifications to read:

"(d) RAP Material (Note3)"

Revise Note 2 of Article 355.02 of the Standard Specifications to read:

"Note 2. Unless otherwise specified on the plans, the bituminous material shall be performance graded (PG) asphalt cement (AC) , PG58-22. When more than 15 percent RAP is used, a softer PG binder may be required as determined by the Engineer. When the pavement has a structural number (D_t) of 3.00 or less, the low temperature grade of the asphalt cement shall be lowered one grade (i.e. PG58-28 replaces PG58-22)."

Add the following to the end Article 355.02 of the Standard Specifications:

"Note 3. RAP shall meet the requirements of the special provision "RAP for Use in Bituminous Concrete Mixtures"."

Add the following to Article 355.03 of the Standard Specifications:

"(k) Superpave Gyratory Compactor (Note 6)
(l) Ignition Oven (Note 7)

Note 6. The Superpave gyratory compactor (SGC) shall be used for all laboratory mixture compaction.

Note 7. The ignition oven shall be used for determination of AC content. The ignition oven shall also be used to recover aggregates for all required washed gradations. The Engineer may waive the ignition oven requirement for AC content if the aggregates to be used are known to have ignition AC content calibration factors which exceed 1.5 percent. If the calibration factor exceeds 1.5 percent other IDOT approved methods shall be utilized for determination of AC content."

Revise Article 355.05 of the Standard Specifications to read:

"**355.05 Mixture Design.** The Contractor shall submit mix designs for approval, for each required mixture. Mix designs shall be developed by Level III personnel who have completed the course, "Superpave Mix Design Upgrade". The mixtures shall be designed according to the respective Illinois Modified AASHTO references listed below:

AASHTO MP 2 Standard Specification for Superpave Volumetric Mix Design

AASHTO PP 2 Standard Practice for Short and Long Term Aging of Hot Mix Asphalt (HMA)

AASHTO PP 19 Standard Practice for Volumetric Analysis of Compacted Hot Mix Asphalt (HMA)

AASHTO PP 28 Standard Practice for Designing Superpave HMA

AASHTO T 209 Theoretical Maximum Specific Gravity and Density of Bituminous Paving Mixtures

AASHTO T 312 Preparing and Determining the Density of Hot Mix Asphalt (HMA) Specimens by Means of the Superpave Gyratory Compactor

AASHTO T 308 Determining the Asphalt Content of Hot Mix Asphalt (HMA) by the Ignition Method

(a) Job Mix Formula (JMF). The JMF shall be according to the following limits:

Ingredient	Percent by Dry Weight
Aggregate	93.0 to 96.0
Asphalt Cement	4.0 to 7.0
Dust/AC Ratio	1.4

When RAP material is being used, the JMF shall be according to the following limits:

Ingredient	Percent by Dry Weight
Virgin Aggregate(s)	46.0 to 96.0
RAP Material(s) (Note 1)	0 to 50
Mineral Filler (if required)	0 to 5.0
Asphalt Cement	4.0 to 7.0
Dust/AC Ratio	1.4

Note 1. If specified on the plans, the maximum percentage of RAP shall be as specified therein.

It is recommended that the selected combined aggregate gradation not pass through the restricted zones specified in Illinois Modified AASHTO MP 2.

Bituminous concrete binder course Superpave mixture IL-25.0 or IL-19.0 meeting the requirements of the special provision, “Superpave Bituminous Concrete Mixtures" may also be used. The minimum compacted lift thickness specified therein shall apply.

(b) Volumetric Requirements.

Design Compactive Effort	Design Air Voids Target (%)
N_{DES} =50	2.0

(c) Determination of Need for Anti-Stripping Additive. The mixture designer shall determine if an additive is needed in the mix to prevent stripping. The determination will be made on the basis of tests performed according to Illinois Modified AASHTO T 283 using 4 in. Marshall bricks. To be considered acceptable by the Engineer as a mixture not susceptible to stripping, the ratio of conditioned to unconditioned split tensile strengths (TSR) shall be equal to or greater than 0.75. Mixtures, either with or without an additive, with TSR values less than 0.75 will be considered unacceptable.

If it is determined that an additive is required, the additive may be hydrated lime, slaked quicklime, or a liquid additive, at the Contractor's option. The liquid additive shall be selected from the Department's list of approved additives and may be limited to those which have exhibited satisfactory performance in similar mixes.

Dry hydrated lime shall be added at a rate of 1.0 to 1.5 percent by weight of total dry aggregate. Slurry shall be added in such quantity as to provide the required amount of hydrated lime solids by weight of total dry aggregate. The exact rate of application for all anti-stripping additives will be determined by the Engineer. The method of application shall be according to Article 406.12 of the Standard Specifications."

Revise Article 355.06 of the Standard Specifications to read:

"**355.06 Mixture Production.** The asphalt cement shall be transferred to the asphalt tanks and heated to a temperature of 120 °C (250 °F) to 175 °C (350 °F). If the loading temperature exceeds 175 °C (350 °F), the asphalt shall not be used until it has cooled to 175 °C (350 °F). Wide variations in temperature which affect the amount of asphalt delivered will not be permitted.

When a hot-mix plant conforming to Article 1102.01 is used, the aggregate shall be dried and heated in the revolving dryer to a temperature of 120 °C (250 °F) to 175 °C (350 °F).

The aggregate and bituminous material used in the bituminous aggregate mixture shall be measured separately and accurately by weight or by volume. When the aggregate is in the mixer, the bituminous material shall be added and mixing continued for a minimum of 30 seconds and until a homogeneous mixture is produced in which all particles of the aggregate are coated. The mixing period, size of the batch and the production rate shall be approved by the Engineer.

The ingredients shall be heated and combined in such a manner as to produce a mixture which, when discharged from the mixer, shall be workable and vary not more 10 °C (20 °F) from the temperature set by the Engineer.

When RAP material(s) is used in the bituminous aggregate mixture, the virgin aggregate(s) shall be dried and heated in the dryer to a temperature that will produce the specified resultant mix temperature when combined with the RAP material.

The heated virgin aggregates and mineral filler shall be combined with RAP material in such a manner as to produce a bituminous mixture which when discharged from the mixer shall not vary more than 15 °C (30 °F) from the temperature set by the Engineer. The combined ingredients shall be mixed for a minimum of 35 seconds and until a homogeneous mixture as to composition and temperature is obtained. The total mixing time shall be a minimum of 45 seconds consisting of dry and wet mixing. Variation in wet and dry mixing times may be permitted, depending on the moisture content and amount of salvaged material used. The mix temperature shall not exceed 175 °C (350 °F). Wide variations in the mixture temperature will be cause for rejection of the mix.

(a) Personnel. The QC Manager and Level I Technician shall have successfully completed the Department's "Superpave Field Control Course".

(b) Required Tests. Testing shall be conducted to control the production of the bituminous mixture at a frequency not less than that listed for Non-Class I mixtures in the special provision "QC/QA of Bituminous Concrete Mixtures".

During production, the ratio of minus 75 µm (#200) sieve material to total asphalt cement shall be not less than 0.6 nor more than 1.6, and the moisture content of the mixture at discharge from the mixer shall not exceed 0.5 percent. If at any time the ratio of minus 75 µm (#200) material to asphalt or moisture content of the mixture falls outside the stated limits, production of the mix shall cease. The cause shall be determined and corrective action satisfactory to the Engineer shall be initiated prior to resumption of production.

During production, mixture containing an anti-stripping additive will be tested by the Engineer for stripping according to Illinois Modified AASHTO T 283. If the mixture fails to meet the TSR criteria for acceptance, no further mixture will be accepted until the Contractor takes such action as is necessary to furnish a mixture meeting the criteria.

(c) Control Charts/Limits. Control charts/limits shall be according to QC/QA requirements for Non-Class I Mixtures."

Revise Article 355.08 of the Standard Specifications to read:

"**355.08 Placing.** The bituminous mixture shall be placed with a spreading and finishing machine. The minimum compacted thickness of each lift shall be according to the following table:

Nominal Maximum Aggregate Size of Mixture	Minimum Compacted Lift Thickness
CA 10 - 19 mm (3/4 in.)	57 mm (2 1/4 in.)
CA 6 – 25 mm (1 in.)	76 mm (3 in.)

The maximum compacted thickness of each lift shall be 100 mm (4 in.). If the Contractor elects to substitute an approved vibratory roller for one of the required rollers, the maximum compacted thickness of the each lift, excluding the top lift, may be increased to 150 mm (6 in.) provided the required density is obtained.

The surface of each lift shall be clean and dry before succeeding lifts are placed."

Revise Article 355.13 of the Standard Specifications to read:

"**355.13 Basis of Payment**. This work will be paid for at the contract unit price per square meter (square yard) for BITUMINOUS BASE COURSE SUPERPAVE of the thickness specified."

Revise Article 356.02 of the Standard Specifications to read:

"**356.02 Materials.** The materials for the bituminous concrete mixture shall meet the requirements of Article 355.02, be designed according to Article 355.05 and produced according to Article 355.06. Bituminous concrete binder course Superpave mixture IL-25.0 or IL-19.0 meeting the requirements of the special provision, "Superpave Bituminous Concrete Mixtures" may also be used. The minimum compacted lift thickness specified therein shall apply."

Revise the first paragraph of Article 356.06 of the Standard Specifications to read:

"**356.06 Base Course Widening.** The bituminous concrete mixture shall be transported according to Article 406.14."

Revise the second sentence of the fifth paragraph of Article 356.06 of the Standard Specifications to read:

"The minimum compacted thickness of each lift shall be according to the table shown in Article 355.08."

Revise the first paragraph of Article 356.11 of the Standard Specifications to read:

"**356.11 Basis of Payment**. Where the Department requires that bituminous concrete be used, this work will be paid for at the contract unit price per square meter (square yard) for BITUMINOUS CONCRETE BASE COURSE WIDENING SUPERPAVE of the thickness specified."

BITUMINOUS CONCRETE SURFACE COURSE (BDE)

Effective: April 1, 2001 Revised: April 1, 2003

Replace the fourth paragraph of Article 406.23(b) of the Standard Specifications with the following:

"Mixture for cracks, joints, flangeways, leveling binder (machine method), leveling binder (hand method) and binder course in excess of 103 percent of the quantity specified by the Engineer will not be measured for payment.

Surface course mixture in excess of 103 percent of adjusted plan quantity will not be measured for payment. The adjusted plan quantity for surface course mixtures will be calculated as follows:

Adjusted Plan Quantity = C x quantity shown on the plans or as specified by the Engineer.

where C = metric: $C = \frac{G_{mb} \times 24.99}{U}$ English: $C = \frac{G_{mb} \times 46.8}{U}$

and where:

G_{mb} = average bulk specific gravity from approved mix design.
U = Unit weight of surface course shown on the plans in kg/sq m/25 mm (lb/sq yd/in.), used to estimate plan quantity.
24.99 = metric constant.
46.8 = English constant.

If project circumstances warrant a new surface course mix design, the above equations shall be used to calculate the adjusted plan quantity for each mix design using its respective average bulk specific gravity."

BRIDGE DECK CONSTRUCTION

Effective: April 1, 2002 Revised: January 1, 2004

Add the following to Article 503.03 of the Standard Specifications:

"(h) Fogging Equipment .....1103.17(k)"

Add the following after the first sentence of the second paragraph to Article 503.07 of the Standard Specifications:

"When placing Class BD concrete, the discharge end of the pump shall have attached an "S" shaped flexible or rigid conduit, a 90 degree elbow with a minimum of 3 m (10 ft) of flexible conduit placed parallel to the deck, or a similar configuration approved by the Engineer."

Add the following after the second sentence of the ninth paragraph of Article 503.07 of the Standard Specifications:

"When consolidating concrete in bridge decks, the vibrator shall be vertically inserted into the concrete for 3 - 5 seconds, or for a period of time determined by the Engineer."

Add the following after the first paragraph of Article 503.17 of the Standard Specifications:

"For the bridge deck pour, fogging equipment shall be in operation unless the evaporation rate is less than 0.5 kg/sq m/hour (0.1 lb/sq ft/hour) and the Engineer gives permission to turn off the equipment. The evaporation rate shall be determined according to the figure in the Portland Cement Association's publication, "Design and Control of Concrete Mixtures" (refer to the section on plastic shrinkage cracking). The Contractor shall provide temperature, relative humidity, and wind speed measuring equipment.

The fogging equipment shall be adjusted to adequately cover the entire width of the pour.

If there is a delay of more than ten minutes during bridge deck placement, wet burlap shall be used to protect the concrete until operations resume.

Concrete placement operations shall be coordinated to limit the distance between the point of concrete placement and concrete covered with cotton mats for curing. The distance shall not exceed 10.5 m (35 ft). For bridge deck widths greater than 15 m (50 ft), the distance shall not exceed 7.5 m (25 ft)."

Add the following to the end of the first paragraph of Article 503.17(b) of the Standard Specifications to read:

"The concrete in these areas shall be struck off during the deck pour and excess material from the finishing machine shall not be incorporated."

Revise Article 1020.05(d) of the Standard Specifications to read:

"(d) Class BD Concrete. The maximum mortar factor shall be 0.86."

Add the following to Article 1103.17 of the Standard Specifications:

"(k) Fogging Equipment. Fogging equipment shall consist of a mechanically operated, pressurized system using a triple headed nozzle or an equivalent nozzle. The fogging nozzle shall be capable of producing a fine fog mist that will increase the relative humidity of the air just above the fresh concrete surface without accumulating any water on the concrete. The fogging equipment shall be mounted behind the roller and pan of finishing machine or on a separate foot bridge. Controls shall be designed to vary the volume of water flow, be easily accessible and immediately shut off the water when in the off position. Hand held fogging equipment will not be allowed."

CALCIUM CHLORIDE ACCELERATOR FOR PORTLAND CEMENT CONCRETE PATCHING (BDE)

Effective: January 1, 2001

The Contractor has the option to use a calcium chloride accelerator for Class PP-1 or Class PP-2 concrete.

COARSE AGGREGATE FOR TRENCH BACKFILL, BACKFILL AND BEDDING (BDE)

Effective: April 1, 2001
Revised: November 1, 2003

Revise Article 208.02 of the Standard Specifications to read:

"**208.02 Materials.** Materials shall be according to the following Articles of Section 1000 – Materials:

(a) Fine Aggregate (Note 1) 1003.04
(b) Coarse Aggregate (Note 2) 1004.06

Note 1. The fine aggregate shall be moist to the satisfaction of the Engineer.

Note 2. The coarse aggregate shall be wet to the satisfaction of the Engineer."

Revise the first sentence of the second paragraph of subparagraph (b) in Article 208.03 of the Standard Specifications to read:

"Any material meeting the requirements of Articles 1003.04 or 1004.06 which has been excavated from the trenches shall be used for backfilling the trenches."

Add the following to the end of Article 542.02 of the Standard Specifications:

"(bb) Fine Aggregate (Note 1) 1003.04
(cc) Coarse Aggregate (Note 2) 1004.06

Note 1. The fine aggregate shall be moist to the satisfaction of the Engineer.

Note 2. The coarse aggregate shall be wet to the satisfaction of the Engineer."

Revise the first and second sentences of the second paragraph of subparagraph (a) of Article 542.04 of the Standard Specifications to read:

"The unstable and unsuitable material shall be removed to a depth determined by the Engineer and for a width of one diameter (or equivalent diameter) of the pipe on each side of the pipe culvert, and replaced with aggregate. Rock shall be removed to an elevation 300 mm (1 ft) lower than the bottom of the pipe or to a depth equal to 40 mm/m (1/2 in./ft) of ultimate fill height over the top of the pipe culvert, whichever is the greater depth, and for a width as specified in (b) below, and replaced with aggregate."

Revise the second paragraph of subparagraph (c) of Article 542.04 of the Standard Specifications to read:

"Well compacted aggregate, at least 100 mm (4 in.) in depth below the pipe culvert, shall be placed the entire width of the trench and for the length of the pipe culvert, except well

compacted impervious material shall be used for the outer 1 m (3 ft) at each end of the pipe. When the trench has been widened by the removal and replacement of unstable or unsuitable material, the foundation material shall be placed for a width not less than the above specified widths on each side of the pipe. The aggregate and impervious material shall be approved by the Engineer and shall be compacted to the Engineer's satisfaction by mechanical means."

Revise subparagraph (e) of Article 542.04 of the Standard Specifications to read:

"(e) Backfilling. As soon as the condition of the pipe culvert will permit, the entire width of the trench shall be backfilled with aggregate to a height of at least the elevation of the center of the pipe. The aggregate shall be placed longitudinally along the pipe culvert, except at the outer 1 m (3 ft) at each end of the culvert which shall be backfilled with impervious material. The elevation of the backfill material on each side of the pipe shall be the same. The space under the pipe shall be completely filled. The aggregate and impervious material shall be placed in 200 mm (8 in.) layers, loose measurement. When using PVC, PE, or corrugated metal pipe, the aggregate shall be continued to a height of at least 300 mm (1 ft) above the top of the pipe and compacted to a minimum of 85 percent of standard lab density by mechanical means. When reinforced concrete pipes are used and the trench is within 600 mm (2 ft) of the pavement structure, the backfill shall be compacted to a minimum of 85 percent of standard lab density by mechanical means.

When using PVC, PE, or corrugated metal pipe a minimum of 300 mm (1 ft) of cover from the top of the pipe to the top of the subgrade will be required.

The installed pipe and its embedment shall not be disturbed when using movable trench boxes and shields, sheet pile, or other trench protection.

The remainder of the trench shall be backfilled with select material, from excavation or borrow, free from large or frozen lumps, clods or rock, meeting the approval of the Engineer. The material shall be placed in layers not exceeding 200 mm (8 in.) in depth, loose measurement and compacted to 95 percent of the standard laboratory density. Compaction shall be obtained by use of mechanical tampers or with approved vibratory compactors. Before compacting, each layer shall be wetted or dried to bring the moisture content within the limits of 80 to 110 percent of optimum moisture content determined according to AASHTO T 99 (Method C). All backfill material shall be deposited in the trench or excavation in such a manner as not to damage the culvert. The filling of the trench shall be carried on simultaneously on both sides of the pipe. The Contractor may, at his/her expense, backfill the entire trench with aggregate in lieu of select material. The aggregate shall be compacted to the satisfaction of the Engineer by mechanical means.

The backfill material for all trenches and excavations made in the subgrade of the proposed improvement, and for all trenches outside of the subgrade where the inner edge of the trench is within 600 mm (2 ft) of the edge of the proposed pavement, curb, gutter, curb and gutter, stabilized shoulder, or sidewalk shall be according to Section 208. The trench backfill material shall be compacted to a minimum of 85 percent of standard lab density by mechanical means.

The Contractor may, at his/her expense, backfill the entire trench with controlled low strength material meeting the approval of the Engineer.

When the trench has been widened for the removal and replacement of unstable or unsuitable material, the backfilling with aggregate and impervious material, will be required for a width of at least the specified widths on each side of the pipe. The remaining width of each layer may be backfilled with select material. Each 200 mm (8 in.) layer for the entire trench width shall be completed before beginning the placement of the next layer."

Revise subparagraph (b) of Article 542.05 of the Standard Specifications to read:

"(b) Embankment. Embankment extending to an elevation of 300 mm (1 ft) over the top of the pipe shall be constructed according to Article 542.04(f), except the material up to the elevation of the center of the pipe and extending to a width of at least 450 mm (18 in.) on each side of the pipe, exclusive of the outer 1 m (3 ft) at each end of the pipe, shall consist of aggregate. At the outer 1 m (3 ft) at each end of the culvert, impervious material shall be used."

Add the following paragraph after the first paragraph of Article 542.10 of the Standard Specifications:

"Trench backfill will be measured for payment according to Article 208.03."

Add the following paragraph after the third paragraph of Article 542.11 of the Standard Specifications:

"Trench backfill will be paid for according to Article 208.04."

Add the following to of Article 550.02 of the Standard Specifications:

"(m) Fine Aggregate (Note 2) 1003.04
(n) Coarse Aggregate (Note 3) 1004.06

Note 2. The fine aggregate shall be moist to the satisfaction of the Engineer.

Note 3. The coarse aggregate shall be wet to the satisfaction of the Engineer."

Revise the first two sentences of the third paragraph of Article 550.04 of the Standard Specifications to read:

"Well compacted, aggregate bedding material at least 100 mm (4 in.) in depth below the pipe, shall be placed for the entire width of the trench and length of the pipe. The aggregate shall be compacted to the satisfaction of the Engineer by mechanical means."

Revise Article 550.07 of the Standard Specifications to read:

"**550.07 Backfilling.** As soon as the condition of the pipe will permit, the entire width of the trench shall be backfilled with aggregate to a height of at least the elevation of the center of the pipe. The aggregate shall be placed longitudinally along the pipe. The elevation of the backfill material on each side of the pipe shall be the same. The space under the pipe shall be completely filled. The aggregate backfill material shall be placed in 200 mm (8 in.) layers, loose measurement and compacted to the satisfaction of the Engineer by mechanical means. When using PVC pipe, the aggregate shall be continued to a height of at least 300 mm (12 in.) above the top of the pipe.

The installed pipe and its embedment shall not be disturbed when using movable trench boxes and shields, sheet pile, or other trench protection.

The remainder of the trench and excavation shall be backfilled to the natural line or finished surface as rapidly as the condition of the sewer will permit. The backfill material shall consist of suitable excavated material from the trench or of trench backfill as herein specified. All backfill material shall be deposited in the trench or excavation in such a manner as not to damage the sewer and shall be compacted to the satisfaction of the Engineer by mechanical means. The filling of the trench shall be carried on simultaneously on both sides of the pipe.

The backfill material for trenches and excavation made in the subgrade of the proposed improvement, and for all trenches outside of the subgrade where the inner edge of the trench is within 600 mm (2 ft) of the edge of the proposed pavement, curb, gutter, curb and gutter, stabilized shoulder or sidewalk shall be according to Section 208. The backfill material shall be compacted to 85 percent of standard lab density by mechanical means.

All backfill material up to a height of 300 mm (1 ft) above the pipe shall be deposited in uniform layers not exceeding 200 mm (8 in.) thick, loose measurement. The material in each layer shall be compacted to the satisfaction of the Engineer by mechanical means. The backfilling above this height shall be done according to Method 1, 2 or 3 as described below, with the following exceptions.

When trench backfill or excavated material meeting the requirements of Section 208 is required above the first 300 mm (1 ft) of the pipe, the layers shall not exceed 200 mm (8 in.). Gradations CA6 or CA10 shall not be used with Method 2 or Method 3.

Method 1. The material shall be deposited in uniform layers not exceeding 300 mm (1 ft) thick, loose measurement, and each layer shall be compacted to the satisfaction of the Engineer by mechanical means.

Method 2. The material shall be deposited in uniform layers not exceeding 300 mm (1 ft) thick, loose measurement, and each layer shall be either inundated or deposited in water.

Method 3. The trench shall be backfilled with loose material, and settlement secured by introducing water through holes jetted into the backfill to a point approximately 600 mm (2 ft) above the top of the pipe. The holes shall be spaced as directed by the Engineer but shall be no farther than 2 m (6 ft) apart.

The water shall be injected at a pressure just sufficient to sink the holes at a moderate rate of speed. The pressure shall be such that the water will not cut cavities in the backfill material nor overflow the surface. If water does overflow the surface, it shall be drained into the jetted holes by means of shallow trenches.

Water shall be injected as long as it will be absorbed by the backfill material and until samples taken from test holes in the trench show a satisfactory moisture content. The Contractor shall bore the test holes not more than 15 m (50 ft) apart and at such other locations in the trench designated by the Engineer. As soon as the watersoaking has been completed, all holes shall be filled with soil and compacted by ramming with a tool approved by the Engineer.

Backfill material which has been watersoaked shall be allowed to settle and dry for at least 10 days before any surface course or pavement is constructed on it. The length of time may be altered, if deemed desirable, by the Engineer. Where the inner edge of the trench is within 600 mm (2 ft) of the edge of the proposed pavement, curb, gutter, curb and gutter, stabilized shoulder or sidewalk, the provisions of this paragraph shall also apply.

At the end of the settling and drying period, the crusted top of the backfill material shall be scarified and, if necessary, sufficient backfill material added, as specified in Method 1, to complete the backfilling operations.

The method used for backfilling and compacting the backfill material shall be the choice of the Contractor. If the method used does not produce results satisfactory to the Engineer, the Contractor will be required to alter or change the method being used so the resultant backfill will be satisfactory to the Engineer. Should the Contractor be required to alter or change the method being used, no additional compensation will be allowed for altering or changing the method.

The Contractor may, at his/her expense, backfill the entire trench with controlled low strength material meeting the approval of the Engineer.

When sheeting and bracing have been used, sufficient bracing shall be left across the trench as the backfilling progresses to hold the sides firmly in place without caving or settlement. This bracing shall be removed as soon as practicable. Any depressions which may develop within the area involved in the construction operation due to settlement of the backfilling material shall be filled in a manner approved by the Engineer.

When the Contractor constructs the trench with sloped or benched sides according to Article 550.04, backfilling for the full width of the excavation shall be as specified, except no additional compensation will be allowed for trench backfill material required outside the vertical limits of the specified trench width.

Whenever excavation is made for installing sewer pipe across earth shoulders or private property, the topsoil disturbed by excavation operations shall be replaced as nearly as possible in its original position, and the whole area involved in the construction operations shall be left in a neat and presentable condition.

When using any PVC pipe, the pipe shall be backfilled with aggregate to 300 mm (1 ft) over the top of the pipe and compacted to a minimum of 85 percent of standard lab density by mechanical means.

When reinforced concrete pipes are used and the trench is within 600 mm (2 ft) of the pavement structure, the backfill shall be compacted to a minimum of 85 percent of standard lab density by mechanical means.

Deflection Testing for Storm Sewers. All PVC storm sewers will be tested for deflection not less than 30 days after the pipe is installed and the backfill compacted.

For PVC storm sewers with diameters 600 mm (24 in.) or smaller, a mandrel drag shall be used for deflection testing. For PVC storm sewers with diameters over 600 mm (24 in.), deflection measurements other than by a mandrel drag shall be used.

Where the mandrel is used, the mandrel shall be furnished by the Contractor and pulled by hand through the pipeline with a suitable rope or cable connected to each end. Winching or other means of forcing the deflection gauge through the pipeline will not be allowed.

The mandrel shall be of a shape similar to that of a true circle enabling the gauge to pass through a satisfactory pipeline with little or no resistance. The mandrel shall be of a design to prevent it from tipping from side to side and to prevent debris build-up from occurring between the channels of the adjacent fins or legs during operation. Each end of the core of the mandrel shall have fasteners to which the pulling cables can be attached. The mandrel shall have 9, various sized fins or legs of appropriate dimension for various diameter pipes. Each fin or leg shall have a permanent marking that states its designated pipe size and percent of deflection allowable.

The outside diameter of the mandrel shall be 95 percent of the base inside diameter, where the base inside diameter is:

For all PVC pipe (as defined using ASTM D 3034 methodology):

If the pipe is found to have a deflection greater than specified, that pipe section shall be removed, replaced, and retested."

Revise subparagraph (c) of Article 1003.04 of the Standard Specifications to read:

"(c) Gradation. The fine aggregate gradation shall be as follows:

Backfill, bedding and trench backfill for pipe
culverts and storm sewers ..... FA 1, FA 2, FA 6, or FA 21
Porous granular embankment and backfill, french drains,
and sand backfill for underdrains ..... FA 1, FA 2, or FA20 (Note 1)

Note 1: For FA 1, FA 2, and FA 20 the percent passing the 75 μm (No. 200) sieve shall be 2 ± 2."

Revise the title of Article 1004.06 of the Standard Specifications to read:

"Coarse Aggregate for Blotter, Embankment, Backfill, Trench Backfill, French Drains, and Bedding."

Add the following to the end of subparagraph (c) of Article 1004.06 of the Standard Specifications:

"Backfill, bedding, and trench backfill for pipe culverts
and storm sewers ..... CA 6, CA 10, and CA 18"

CONCRETE ADMIXTURES (BDE)

Effective: January 1, 2003 Revised: January 1, 2004

Revise Article 1020.05(b) of the Standard Specifications to read:

"(b) Admixtures. Except as specified, the use of admixtures to increase the workability or to accelerate the hardening of the concrete will be permitted only when approved in writing by the Engineer. The Department will maintain an Approved List of Concrete Admixtures. When the Department permits the use of a calcium chloride accelerator, it shall be according to Article 442.02, Note 5.

When the atmosphere or concrete temperature is 18 °C (65 °F) or higher, a retarding admixture meeting the requirements of Article 1021.03 shall be used in the Class BD Concrete and portland cement concrete bridge deck overlays. The amount of retarding admixture to be used will be determined by the Engineer. The proportions of the ingredients of the concrete shall be the same as without the retarding admixture except that the amount of mixing water shall be reduced, as may be necessary, in order to maintain the consistency of the concrete as required. In addition, a high range water-reducing admixture shall be used in Class BD Concrete. The amount of high range water-reducing admixture will be determined by the Engineer. At the option of the Contractor, a water-reducing admixture may be used. Type I cement shall be used.

For Class PC and PS Concrete, a retarding admixture may be added to the concrete mixture when the concrete temperature is 18 °C (65 °F) or higher. The Engineer may order or permit the use of a retarding or water-reducing admixture whenever the Engineer considers it appropriate.

At the Contractor's option, admixtures in addition to an air-entraining admixture may be used for Class PP-1 concrete. The accelerator shall be the non-chloride type. If a water-reducing or retarding admixture is used, the cement factor may be reduced a maximum 18 kg/cu m (0.30 hundredweight/cu yd). If a high range water-reducing admixture is used, the cement factor may be reduced a maximum 36 kg/cu m (0.60 hundredweight/cu yd). Cement factor reductions shall not be cumulative when using multiple admixtures. An accelerator shall always be added prior to a high range water-reducing admixture, if both are used.

If Class C fly ash or ground granulated blast-furnace slag is used in Class PP-1 concrete, a water-reducing or high range water-reducing admixture shall be used. However, the cement factor shall not be reduced if a water-reducing, retarding, or high range water-reducing admixture is used. In addition, an accelerator shall not be used.

For Class PP-2 or PP-3 concrete, a non-chloride accelerator followed by a high range water-reducing admixture shall be used, in addition to the air-entraining admixture. For Class PP-3 concrete, the non-chloride accelerator shall be calcium nitrite.

For Class PP-2 or PP-3 concrete, the Contractor has the option to use a water-reducing admixture. A retarding admixture shall not be used unless approved by the Engineer. A water-reducing, retarding, or high range water-reducing admixture shall not be used to reduce the cement factor.

When the air temperature is less than 13 °C (55 °F) for Class PP-1 or PP-2 concrete, the non-chloride accelerator shall be calcium nitrite.

For Class PP-4 concrete, a high range water-reducing admixture shall be used in addition to the air-entraining admixture. The Contractor has the option to use a water-reducing admixture. An accelerator shall not be used. For stationary or truck mixed concrete, a retarding admixture shall be used to allow for haul time. The Contractor has the option to use a mobile portland cement concrete plant according to Article 1103.04, but a retarding admixture shall not be used unless approved by the Engineer. A water-reducing, retarding, or high range water-reducing admixture shall not be used to reduce the cement factor.

If the Department specifies a calcium chloride accelerator for Class PP-1 concrete, the maximum chloride dosage shall be 1.0 L (1.0 quart) of solution per 45 kg (100 lb) of cement. The dosage may be increased to a maximum 2.0 L (2.0 quarts) per 45 kg (100 lb) of cement if approved by the Engineer. If the Department specifies a calcium chloride accelerator for Class PP-2 concrete, the maximum chloride dosage shall be 1.3 L (1.3 quarts) of solution per 45 kg (100 lb) of cement. The dosage may be increased to a maximum 2.6 L (2.6 quarts) per 45 kg (100 lb) of cement if approved by the Engineer.

For Class PV, MS, SI, RR, SC and SH concrete, at the option of the Contractor, or when specified by the Engineer, a water-reducing admixture or a retarding admixture may be used. The amount of water-reducing admixture or retarding admixture permitted will be determined by the Engineer. The air-entraining admixture and other admixtures shall be added to the concrete separately, and shall be permitted to intermingle only after they have separately entered the concrete batch. The sequence, method and equipment for adding the admixtures shall be approved by the Engineer. The water-reducing admixture shall not delay the initial set of the concrete by more than one hour. Type I cement shall be used.

When a water-reducing admixture is added, a cement factor reduction of up to 18 kg/cu m (0.30 hundredweight/cu yd), from the concrete designed for a specific slump

without the admixture, will be permitted for Class PV, MS, SI, RR, SC and SH concrete. When an approved high range water-reducing admixture is used, a cement factor reduction of up to 36 kg/cu m (0.60 hundredweight/cu yd), from a specific water cement/ratio without the admixture, will be permitted based on a 14 percent minimum water reduction. This is applicable to Class PV, MS, SI, RR, SC and SH concrete. A cement factor below 320 kg/cu m (5.35 hundredweight/cu yd) will not be permitted for Class PV, MS, SI, RR, SC and SH concrete. A cement factor reduction will not be allowed for concrete placed underwater. Cement factor reductions shall not be cumulative when using multiple admixtures.

For use of admixtures to control concrete temperature, refer to Articles 1020.14(a) and 1020.14(b).

The maximum slumps given in Table 1 may be increased to 175 mm (7 in.) when a high range water-reducing admixture is used for all classes of concrete except Class PV and PP."

Revise Section 1021 of the Standard Specifications to read:

SECTION 1021 – CONCRETE ADMIXTURES

1021.01 General. Admixtures shall be furnished in liquid form ready for use. The admixtures may be delivered in the manufacturer's original containers, bulk tank trucks or such containers or tanks as are acceptable to the Engineer. Delivery shall be accompanied by a ticket which clearly identifies the manufacturer and trade name of the material. In all cases, containers shall be readily identifiable to the satisfaction of the Engineer as to manufacturer and trade name of the material they contain.

Prior to inclusion of a product on the Department's Approved List of Concrete Admixtures, the manufacturer shall submit a report prepared by an independent laboratory accredited by the AASHTO Accreditation Program. The report shall show the results of physical tests conducted no more than five years prior to the time of submittal, according to applicable specifications.

Tests shall be conducted using materials and methods specified on a "test" concrete and a "reference" concrete, together with a certification that no changes have been made in the formulation of the material since the performance of the tests. The report shall also include water contents and results of set time tests according to AASHTO T 197 that were conducted on both a test and reference concrete, using cement from the source that is used as a standard by the Bureau of Materials and Physical Research. The cement content for all required tests shall either be according to applicable specifications or 335 kg/cu m (5.65 cwt/cu yd). Compressive strength test results for six months and one year will not be required.

Prior to the approval of an admixture, the Engineer may conduct all or part of the applicable tests on a sample that is representative of the material to be furnished. The test and reference concrete mixtures tested by the Engineer will contain a cement content of 335 kg/cu m (5.65 cwt/cu yd).

The manufacturer shall submit certification, both initially and annually thereafter, giving the following information according to ASTM C 494; the average and manufacturing range of specific gravity, the average and manufacturing range of solids in the solution, and the average and manufacturing range of pH. The initial and annual certifications shall further state that all admixtures, except chloride-based accelerators, shall contain no more than 0.3 percent chloride by mass. The initial submittal shall also include an infrared spectrophotometer trace no more than five years old.

Annual re-submittals will be required and shall include certification that no changes have been made in the formulation since it was initially approved. The certification shall state that the admixture is the same as previously approved, and the Engineer may conduct such tests as deemed desirable to check the properties of the material before re-approval is granted.

When test results are more than seven years old, the manufacturer shall re-submit the infrared spectrophotometer trace and the report prepared by an independent laboratory that is accredited by AASHTO Accreditation Program.

1021.02 Air-Entraining Admixtures. Air-entraining admixtures shall conform to the requirements of AASHTO M 154.

If the manufacturer certifies that the air-entraining admixture is an aqueous solution of Vinsol resin that has been neutralized with sodium hydroxide (caustic soda), testing for compliance with the requirements may be waived by the Engineer. In the certification, the manufacturer shall show complete information with respect to the formulation of the solution, including the number of parts of Vinsol resin to each part of sodium hydroxide. Before the approval of its use is granted, the Engineer will test the solution for its air-entraining quality in comparison with a solution prepared and kept for that purpose.

1021.03 Retarding and Water-Reducing Admixtures. The admixture shall comply with the following requirements:

(a) The retarding admixture shall comply with the requirements of AASHTO M 194, Type B (retarding) or Type D (water-reducing and retarding).

(b) The water-reducing admixture shall comply with the requirements of AASHTO M 194, Type A.

(c) The high range water-reducing admixture shall comply with the requirements of AASHTO M 194, Type F (high range water-reducing) or Type G (high range water-reducing and retarding).

When a Type F or Type G high range water-reducing admixture is used, water-cement ratios shall be a minimum of 0.32.

Type F or Type G admixtures may be used, subject to the following restrictions:

For Class MS, SI, RR, SC and SH concrete, the water-cement ratio shall be a maximum of 0.44.

The Type F or Type G admixture shall be added at the jobsite unless otherwise directed by the Engineer. The initial slump shall be a minimum of 40 mm (1 1/2 in.) prior to addition of the Type F or Type G admixture, except as approved by the Engineer.

When a Type F or Type G admixture is used, retempering with water or with a Type G admixture will not be allowed. An additional dosage of a Type F admixture, not to exceed 40 percent of the original dosage, may be used to retemper concrete once, provided set time is not unduly affected. A second retempering with a Type F admixture may be used for all classes of concrete except Class PP and SC, provided that the dosage does not exceed the dosage used for the first retempering, and provided that the set time is not unduly affected. No further retempering will be allowed.

Air tests shall be performed after the addition of the Type F or Type G admixture.

1021.04 Set Accelerating Admixtures. The admixture shall comply with the requirements of AASHTO M 194, Type C (accelerating) or Type E (water reducing and accelerating)"

CONTROLLED AGGREGATE MIXING SYSTEM (BDE)

Effective: November 1, 2002

Revise the fourth sentence of the first paragraph of Article 311.05(b) of the Standard Specifications to read:

"The water and granular material shall be mixed through a controlled aggregate mixing system. The system shall consist of a mechanical mixing device and aggregate and water measuring devices, meeting the approval of the Engineer."

Revise the third and fourth sentences of the fourth paragraph of Article 351.05(b) of the Standard Specifications to read:

"The water and aggregate shall be mixed through a controlled aggregate mixing system. The system shall consist of a mechanical mixing device and aggregate and water measuring devices, meeting the approval of the Engineer."

Delete the third sentence of the first paragraph of Article 351.05(c) of the Standard Specifications.

Revise the second and third sentences of the first paragraph of Article 481.04(a) of the Standard Specifications to read:

"The water and aggregate shall be mixed through a controlled aggregate mixing system. The system shall consist of a mechanical mixing device and aggregate and water measuring devices, meeting the approval of the Engineer."

CORRUGATED METAL PIPE CULVERTS (BDE)

Effective: August 1, 2003

Revise the fourth paragraph of Article 542.04(d) of the Standard Specifications to read:

> "When corrugated steel or aluminum alloy culvert pipe (including bituminous coated steel or aluminum and pre-coated steel) is used, the pipe shall be placed such that the longitudinal lap is placed at the sides and separate sections of pipe shall be joined with a hugger-type band. When the pipes are fabricated with a smooth sleeve-type coupler, the gasket shall meet the requirements of Article 1006.01."

Add the following paragraph after the first paragraph of Article 1006.01 of the Standard Specifications:

"Round pipes 1200 mm (48 in.) in diameter and smaller may be fabricated with a smooth sleeve-type coupler. Gasket material on the smooth sleeve-type coupler shall be polyisoprene or equal with a durometer hardness of 45±5 (ASTM D 2240, Shore A). Pipe used with smooth sleeve-type couplers shall contain a homing mark that indicates when the joint is tight. The homing mark shall consist of a painted stripe around the circumference of the male end of the pipe."

Delete the last sentence of the second paragraph of Article 1006.01(a) of the Standard Specifications.

Add the following paragraph after the first paragraph of Article 1006.03 of the Standard Specifications:

"Round pipes 1200 mm (48 in.) in diameter and smaller may be fabricated with a smooth sleeve-type coupler. Gasket material on the smooth sleeve-type coupler shall be polyisoprene or equal with a durometer hardness of 45±5 (ASTM D 2240, Shore A). Pipe used with smooth sleeve-type couplers shall contain a homing mark that indicates when the joint is tight. The homing mark shall consist of a painted stripe around the circumference of the male end of the pipe."

CURING AND PROTECTION OF CONCRETE CONSTRUCTION (BDE)

Effective: January 1, 2004

Revise the second and third sentences of the eleventh paragraph of Article 503.06 of the Standard Specifications to read:

"Forms on substructure units shall remain in place at least 24 hours. The method of form removal shall not result in damage to the concrete."

Delete the twentieth paragraph of Article 503.22 of the Standard Specifications.

Revise the "Unit Price Adjustments" table of Article 503.22 of the Standard Specifications to read:

"UNIT PRICE ADJUSTMENTS	
Type of Construction	Percent Adjustment in Unit Price
For concrete in substructures, culverts (having a waterway opening of more than 1 sq m (10 sq ft)), pump houses, and retaining walls (except concrete pilings, footings and foundation seals):	
When protected by:	
Protection Method II	115%
Protection Method I	110%
For concrete in superstructures:	
When protected by:	
Protection Method II	123%
Protection Method I	115%
For concrete in footings:	
When protected by:	
Protection Method I, II or III	107%
For concrete in slope walls:	
When protected by:	
Protection Method I	107%"

Delete the fourth paragraph of Article 504.05(a) of the Standard Specifications.

Revise the second and third sentences of the fifth paragraph of Article 504.05(a) of the Standard Specifications to read:

"All test specimens shall be cured with the units according to Article 1020.13."

Revise the first paragraph of Article 504.06(c)(6) of the Standard Specifications to read:

"Curing and Low Air Temperature Protection. The curing and protection for precast, prestressed concrete members shall be according to Article 1020.13 and this Article."

Revise the first sentence of the second paragraph of Article 504.06(c)(6) of the Standard Specifications to read:

"For curing, air vents shall be in place, and shall be so arranged that no water can enter the void tubes during the curing of the members."

Revise the first sentence of the third paragraph of Article 504.06(c)(6) of the Standard Specifications to read:

"As soon as each member is finished, the concrete shall be covered with curing material according to Article 1020.13."

Revise the eighth paragraph of Article 504.06(c)(6) of the Standard Specifications to read:

"The prestressing force shall not be transferred to any member before the concrete has attained the compressive strength of 28,000 kPa (4000 psi) or other higher compressive release strength specified on the plans, as determined from tests of 150 mm (6 in.) by 300 mm (12 in.) cylinders cured with the member according to Article 1020.13. Members shall not be shipped until 28-day strengths have been attained and members have a yard age of at least 4 days."

Delete the third paragraph of Article 512.03(a) of the Standard Specifications.

Delete the last sentence of the second paragraph of Article 512.04(d) of the Standard Specifications.

Revise the "Index Table of Curing and Protection of Concrete Construction" table of Article 1020.13 of the Standard Specifications to read:

"INDEX TABLE OF CURING AND PROTECTION OF CONCRETE CONSTRUCTION			
TYPE OF CONSTRUCTION	CURING METHODS	CURING PERIOD DAYS	LOW AIR TEMPERATURE PROTECTION METHODS
Cast-in-Place Concrete: [11/]			
Pavement Shoulder	1020.13(a)(1)(2)(3)(4)(5)[3/ 5/]	3	1020.13(c)
Base Course Base Course Widening	1020.13(a)(1)(2)(3)(4)(5)[1/ 2/]	3	1020.13(c)
Driveway Median Curb Gutter Curb and Gutter Sidewalk Slope Wall	1020.13(a)(1)(2)(3)(4)(5)[4/ 5/]	3	1020.13(c)[16/]
Paved Ditch Catch Basin Manhole Inlet Valve Vault	1020.13(a)(1)(2)(3)(4)(5)[4/]	3	1020.13(c)
Pavement Patching	1020.13(a)(1)(2)(3)(4)(5)[2/]	3[12/]	1020.13(c)
Pavement Replacement	1020.13(a)(1)(2)(3)(4)(5)[1/ 2/]	3	442.06(h) and 1020.13(c)
Railroad Crossing	1020.13(a)(3)(5)	1	1020.13(c)
Piles	1020.13(a)(3)(5)	7	1020.13(e)(1)(2)(3)
Footings Foundation Seals	1020.13(a)(1)(2)(3)(4)(5)[4/6/]	7	1020.13(e)(1)(2)(3)
Substructure	1020.13(a)(1)(2)(3)(4)(5)[1/7/]	7	1020.13(e)(1)(2)(3)
Superstructure (except deck)	1020.13(a)(1)(2)(3)(5)[8/]	7	1020.13(e)(1)(2)
Deck	1020.13(a)(5)	7	1020.13(e)(1)(2)[17/]
Retaining Walls	1020.13(a)(1)(2)(3)(4)(5)[1/7/]	7	1020.13(e)(1)(2)
Pump Houses	1020.13(a)(1)(2)(3)(4)(5)[1/]	7	1020.13(e)(1)(2)
Culverts	1020.13(a)(1)(2)(3)(4)(5)[4/6/]	7	1020.13(e)(1)(2)[18/]
Other Incidental Concrete	1020.13(a)(1)(2)(3)(5)	3	1020.13(c)

Precast Concrete: [11/]			
Bridge Beams Piles Bridge Slabs Nelson Type Structural Member	1020.13(a)(3)(5) [9/10/]	As required. [13/]	504.06(c)(6), 1020.13(e)(2)[19/]
All Other Precast Items	1020.13(a)(3)(4)(5)[2/9/10/]	As required. [14/]	504.06(c)(6), 1020.13(e)(2)[19/]
Precast, Prestressed Concrete: [11/]			
All Items	1020.13(a)(3)(5)[9/10/]	Until strand tensioning is released.[15/]	504.06(c)(6), 1020.13(e)(2)[19/]

Notes-General:

1/ Type I, membrane curing only

2/ Type II, membrane curing only

3/ Type III, membrane curing only

4/ Type I, II and III membrane curing

5/ Membrane curing will not be permitted between November 1 and April 15.

6/ The use of water to inundate footings, foundation seals or the bottom slab of culverts is permissible when approved by the Engineer, provided the water temperature can be maintained at 7 °C (45 °F) or higher.

7/ Asphalt Emulsion for Waterproofing may be used in lieu of other curing methods when specified and permitted according to Article 503.18.

8/ On non-traffic surfaces which receive protective coat according to Article 503.19, a linseed oil emulsion curing compound may be used as a substitute for protective coat and other curing methods. The linseed emulsion curing compound will be permitted between April 16 and October 31 of the same year, provided it is applied with a mechanical sprayer according to Article 1101.09 (b), and meets the material requirements of Article 1022.07.

9/ Steam curing (heat and moisture) is acceptable and shall be accomplished by the method specified in Article 504.06(c)(6).

10/ A moist room according to AASHTO M 201 is acceptable for curing.

11/ If curing is required and interrupted because of form removal for cast-in-place concrete items, precast concrete products, or precast prestressed concrete products, the curing shall be resumed within two hours from the start of the form removal.

12/ Curing maintained only until opening strength is attained, with a maximum curing period of three days.

13/ The curing period shall end when the concrete has attained the mix design strength. The producer has the option to discontinue curing when the concrete has attained 80 percent of the mix design strength or after seven days. All strength test specimens shall remain with the units and shall be subjected to the same curing method and environmental condition as the units, until the time of testing.

14/ The producer shall determine the curing period or may elect to not cure the product. All strength test specimens shall remain with the units and shall be subjected to the same curing method and environmental condition as the units, until the time of testing.

15/ The producer has the option to continue curing after strand release.

16/ When structural steel or structural concrete is in place above slope wall, Article 1020.13(c) shall not apply. The protection method shall be according to Article 1020.13(e)(1).

17/ When Article 1020.13(e)(2) is used to protect the deck, the housing may enclose only the bottom and sides. The top surface shall be protected according to Article 1020.13(e)(1).

18/ For culverts having a waterway opening of 1 sq m (10 sq ft) or less, the culverts may be protected according to Article 1020.13(e)(3).

19/ The seven day protection period in the first paragraph of Article 1020.13(e)(2) shall not apply. The protection period shall end when curing is finished. For the third paragraph of Article 1020.13(e)(2), the decrease in temperature shall be according to Article 504.06(c)(6)."

Add the following to Article 1020.13(a) of the Standard Specifications:

"(5) Wetted Cotton Mat Method. After the surface of concrete has been textured or finished, it shall be covered immediately with dry cotton mats. The cotton mats shall be placed in a manner which will not mar the concrete surface. A texture resulting from the cotton mat material is acceptable. The cotton mats shall then be wetted immediately and thoroughly soaked with a gentle spray of water. For bridge decks, a foot bridge shall be used to place and wet the cotton mats.

The cotton mats shall be maintained in a wetted condition until the concrete has hardened sufficiently to place soaker hoses without marring the concrete surface. The soaker hoses shall be placed on top of the cotton mats at a maximum 1.2 m (4 ft) spacing. The cotton mats shall be kept wet with a continuous supply of water for the remainder of the curing period. Other continuous wetting systems may be used if approved by the Engineer.

After placement of the soaker hoses, the cotton mats shall be covered with white polyethylene sheeting or burlap-polyethylene blankets.

For construction items other than bridge decks, soaker hoses or a continuous wetting system will not be required if the alternative method keeps the cotton mats wet. Periodic wetting of the cotton mats is acceptable.

For areas inaccessible to the cotton mats on bridge decks, curing shall be according to Article 1020.13(a)(3)."

Revise the first paragraph of Article 1020.13(c) of the Standard Specifications to read:

"Protection of Portland Cement Concrete, Other Than Structures, From Low Air Temperatures. When the official National Weather Service forecast for the construction area predicts a low of 0 °C (32 °F), or lower, or if the actual temperature drops to 0 °C (32 °F), or lower, concrete less than 72 hours old shall be provided at least the following protection:"

Delete Article 1020.13(d) and Articles 1020.13(d)(1),(2),(3),(4) of the Standard Specifications.

Revise the first five paragraphs of Article 1020.13(e) of the Standard Specifications to read:

"Protection of Portland Cement Concrete Structures From Low Air Temperatures. When the official National Weather Service Forecast for the construction area predicts a low below 7 °C (45 °F), or if the actual temperature drops below 7 °C (45 °F), concrete less than 72 hours old shall be provided protection. Concrete shall also be provided protection when placed during the winter period of December 1 through March 15. Concrete shall not be placed until the materials, facilities and equipment for protection are approved by the Engineer.

When directed by the Engineer, the Contractor may be required to place concrete during the winter period. If winter construction is specified, the Contractor shall proceed with the construction, including concrete, excavation, pile driving, steel erection and all appurtenant work required for the complete construction of the item, except at times when weather conditions make such operations impracticable.

Regardless of the precautions taken, the Contractor shall be responsible for protection of the concrete placed and any concrete damaged by cold temperatures shall be removed and replaced by the Contractor at his/her own expense."

Add the following at the end of the third paragraph of Article 1020.13(e)(1) of the Standard Specifications:

"The Contractor shall provide means for checking the temperature of the surface of the concrete during the protection period."

Revise the second sentence of the first paragraph of Article 1020.13(e)(2) of the Standard Specifications to read:

"The Contractor shall provide means for checking the temperature of the surface of the concrete or air temperature within the housing during the protection period."

Delete the last sentence of the first paragraph of Article 1020.13(e)(3) of the Standard Specifications.

Add the following Article to Section 1022 of the Standard Specifications:

"**1022.06 Cotton Mats.** Cotton mats shall consist of a cotton fill material, minimum 400 g/sq m (11.8 oz/sq yd), covered with unsized cloth or burlap, minimum 200 g/sq m (5.9 oz/sq yd), and be tufted or stitched to maintain stability.

Cotton mats shall be in a condition satisfactory to the Engineer. Any tears or holes in the mats shall be repaired.

Add the following Article to Section 1022 of the Standard Specifications:

"**1022.07 Linseed Oil Emulsion Curing Compound.** Linseed oil emulsion curing compound shall be composed of a blend of boiled linseed oil and high viscosity, heavy bodied linseed oil emulsified in a water solution. The curing compound shall meet the requirements of

a Type I, II, or III according to Article 1022.01, except the drying time requirement will be waived. The oil phase shall be 50 ± 4 percent by volume. The oil phase shall consist of 80 percent by mass (weight) boiled linseed oil and 20 percent by mass (weight) Z-8 viscosity linseed oil. The water phase shall be 50 ± 4 percent by volume."

Revise Article 1020.14 of the Standard Specifications to read:

"**1020.14 Temperature Control for Placement.** Temperature control for concrete placement shall conform to the following requirements:

(a) Temperature Control other than Structures. The temperature of concrete immediately before placing, shall be not less than 10 °C (50 °F) nor more than 32 °C (90 °F). Aggregates and/or water shall be heated or cooled as necessary to produce concrete within these temperature limits.

When the temperature of the plastic concrete reaches 30 °C (85 °F), an approved retarding admixture shall be used or the approved water reducing admixture in use shall have its dosage increased by 50 percent over the dosage recommended on the Department's Approved List of Concrete Admixtures for the temperature experienced. The amount of retarding admixture to be used will be determined by the Engineer. This requirement may be waived by the Engineer when fly ash compensated mixtures are used.

Plastic concrete temperatures up to 35 °C (96 °F), as placed, may be permitted provided job site conditions permit placement and finishing without excessive use of water on and/or overworking of the surface. The occurrence within 24 hours of unusual surface distress shall be cause to revert to a maximum 32 °C (90 °F) plastic concrete temperature.

Concrete shall not be placed when the air temperature is below 5 °C (40 °F) and falling or below 2 °C (35 °F), without permission of the Engineer. When placing of concrete is authorized during cold weather, the Engineer may require the water and/or the aggregates to be heated to not less than 20 °C (70 °F) nor more than 65 °C (150 °F). The aggregates may be heated by either steam or dry heat prior to being placed in the mixer. The apparatus used shall heat the mass uniformly and shall be so arranged as to preclude the possible occurrence of overheated areas which might damage the materials. No frozen aggregates shall be used in the concrete.

For pavement patching, refer to Article 442.06(e) for additional information on temperature control for placement.

(b) Temperature Control for Structures. The temperature of concrete as placed in the forms shall be not less than 10 °C (50 °F) nor more than 32 °C (90 °F). Aggregates and/or water shall be heated or cooled as necessary to produce concrete within these temperature limits. When insulated forms are used, the temperature of the concrete mixture shall not exceed 25 °C (80 °F). If the Engineer determines that heat of hydration might cause excessive temperatures in the concrete, the concrete shall be placed at a

temperature between 10 °C (50 °F) and 15 °C (60 °F), per the Engineer's instructions. When concrete is placed in contact with previously placed concrete, the temperature of the concrete may be increased as required to offset anticipated heat loss.

Concrete shall not be placed when the air temperature is below 7 °C (45 °F) and falling or below 4 °C (40 °F), without permission of the Engineer. When placing of concrete is authorized during cold weather, the Engineer may require the water and/or the aggregates to be heated to not less than 20 °C (70 °F) nor more than 65 °C (150 °F). The aggregates may be heated by either steam or dry heat prior to being placed in the mixer. The apparatus used shall heat the mass uniformly and shall be so arranged as to preclude the possible occurrence of overheated areas which might damage the materials. No frozen aggregates shall be used in the concrete.

When the temperature of the plastic concrete reaches 30 °C (85 °F), an approved retarding admixture shall be used or the approved water reducing admixture in use shall have its dosage increased by 50 percent over the dosage recommended on the Department's Approved List of Concrete Admixtures for the temperature experienced. The amount of retarding admixture to be used will be determined by the Engineer. This requirement may be waived by the Engineer when fly ash compensated mixtures are used.

(c) Temperature. The concrete temperature shall be determined according to ASTM C 1064."

DISADVANTAGED BUSINESS ENTERPRISE PARTICIPATION (BDE)

Effective: September 1, 2000 Revised: October 1, 2003

FEDERAL OBLIGATION. The Department of Transportation, as a recipient of federal financial assistance, is required to take all necessary and reasonable steps to ensure nondiscrimination in the award and administration of contracts. Consequently, the federal regulatory provisions of 49 CFR part 26 apply to this contract concerning the utilization of disadvantaged business enterprises. This Special Provision will also be used by the Department to satisfy the requirements of the Business Enterprise for Minorities, Females, and Persons with Disabilities Act, 30 ILCS 575. For the purposes of this Special Provision, a disadvantaged business enterprise (DBE) means a business certified by the Department in accordance with the requirements of 49 CFR part 26 and listed in the DBE Directory or most recent addendum.

CONTRACTOR ASSURANCE. The Contractor makes the following assurance and agrees to include the assurance in each subcontract that the Contractor signs with a subcontractor:

The contractor, subrecipient or subcontractor shall not discriminate on the basis of race, color, national origin, or sex in the performance of this contract. The contractor shall carry out applicable requirements of 49 CFR part 26 in the award and administration of federally-assisted contracts. Failure by the contractor to carry out these requirements is a material breach of this contract, which may result in the termination of this contract or such other remedy as the recipient deems appropriate.

OVERALL GOAL SET FOR THE DEPARTMENT. As a requirement of compliance with 49 CFR part 26, the Department has set an overall goal for DBE participation in its federally assisted contracts. That goal applies to all federal-aid funds the Department will expend in its federally assisted contracts for the subject reporting fiscal year. The Department is required to make a good faith effort to achieve the overall goal. The dollar amount paid to all approved DBE firms performing work called for in this contract is eligible to be credited toward fulfillment of the Department's overall goal.

CONTRACT GOAL TO BE ACHIEVED BY THE CONTRACTOR. This contract includes a specific DBE utilization goal established by the Department. The goal has been included because the Department has determined that the work of this contract has subcontracting opportunities that may be suitable for performance by DBE companies. This determination is based on an assessment of the type of work, the location of the work, and the availability of DBE companies to do a part of the work. The assessment indicates that, in the absence of unlawful discrimination, and in an arena of fair and open competition, DBE companies can be expected to perform 15.00% of the work. This percentage is set as the DBE participation goal for this contract. Consequently, in addition to the other award criteria established for this contract, the Department will award this contract to a bidder who makes a good faith effort to meet this goal of DBE participation in the performance of the work. A bidder makes a good faith effort for award consideration if either of the following is done in accordance with the procedures set forth in this Special Provision:

(a) The bidder documents that firmly committed DBE participation has been obtained to meet the goal; or

(b) The bidder documents that a good faith effort has been made to meet the goal, even though the effort did not succeed in obtaining enough DBE participation to meet the goal.

DBE LOCATOR REFERENCES. Bidders may consult the DBE Directory as a reference source for DBE companies certified by the Department. In addition, the Department maintains a letting and item specific DBE locator information system whereby DBE companies can register their interest in providing quotes on particular bid items advertised for letting. Information concerning DBE companies willing to quote work for particular contracts may be obtained by contacting the Department's Bureau of Small Business Enterprises at telephone number (217)785-4611, or by visiting the Department's web site at www.dot.state.il.us.

BIDDING PROCEDURES. Compliance with the bidding procedures of this Special Provision is required prior to the award of the contract and the failure of the as-read low bidder to comply will render the bid nonresponsive.

(a) In order to assure the timely award of the contract, the as-read low bidder must submit a Disadvantaged Business Utilization Plan on Department form SBE 2026 within seven (7) working days after the date of letting. To meet the seven (7) day requirement , the bidder may send the Plan by certified mail or delivery service within the seven (7) working day period. If a question arises concerning the mailing date of a Plan, the mailing date will be established by the U.S. Postal Service postmark on the original

certified mail receipt from the U.S. Postal Service or the receipt issued by a delivery service. It is the responsibility of the as-read low bidder to ensure that the postmark or receipt date is affixed within the seven (7) working days if the bidder intends to rely upon mailing or delivery to satisfy the submission day requirement. The Plan is to be submitted to the Department of Transportation, Bureau of Small Business Enterprises, Contract Compliance Section, 2300 South Dirksen Parkway, Room 319, Springfield, Illinois 62764 (Telefax: (217)785-1524). It is the responsibility of the bidder to obtain confirmation of telefax delivery. The Department will not accept a Utilization Plan if it does not meet the seven (7) day submittal requirement, and the bid will be declared nonresponsive. In the event the bid is declared nonresponsive due to a failure to submit a Plan or failure to comply with the bidding procedures set forth herein, the Department may elect to cause the forfeiture of the penal sum of the bidder's proposal guaranty, and may deny authorization to bid the project if re-advertised for bids. The Department reserves the right to invite any other bidder to submit a Utilization Plan at any time for award consideration or to extend the time for award.

(b) The Utilization Plan shall indicate that the bidder either has obtained sufficient DBE participation commitments to meet the contract goal or has not obtained enough DBE participation commitments in spite of a good faith effort to meet the goal. The Utilization Plan shall further provide the name, telephone number and telefax number of a responsible official of the bidder designated for purposes of notification of plan approval or disapproval under the procedures of this Special Provision.

(c) The Utilization Plan shall include a DBE Participation Commitment Statement, Department form SBE 2025, for each DBE proposed for the performance of work to achieve the contract goal. The signatures on these forms must be original signatures. All elements of information indicated on the said form shall be provided, including but not limited to the following:

(1) The name and address of each DBE to be used;

(2) A description, including pay item numbers, of the commercially useful work to be done by each DBE;

(3) The price to be paid to each DBE for the identified work specifically stating the quantity, unit price and total subcontract price for the work to be completed by the DBE. If partial pay items are to be performed by the DBE, indicate the portion of each item, a unit price where appropriate and the subcontract price amount;

(4) A commitment statement signed by the bidder and each DBE evidencing availability and intent to perform commercially useful work on the project; and

(5) If the bidder is a joint venture comprised of DBE firms and non-DBE firms, the plan must also include a clear identification of the portion of the work to be performed by the DBE partner(s).

(d) The contract will not be awarded until the Utilization Plan submitted by the bidder is approved. The Utilization Plan will be approved by the Department if the Plan commits

sufficient commercially useful DBE work performance to meet the contract goal. The Utilization Plan will not be approved by the Department if the Plan does not commit sufficient DBE performance to meet the contract goal unless the bidder documents that it made a good faith effort to meet the goal. The good faith procedures of Section VIII of this special provision apply. If the Utilization Plan is not approved because it is deficient in a technical matter, unless waived by the Department, the bidder will be notified and will be allowed no less than a five (5) working day period in order to cure the deficiency.

CALCULATING DBE PARTICIPATION. The Utilization Plan values represent work anticipated to be performed and paid for upon satisfactory completion. The Department is only able to count toward the achievement of the overall goal and the contract goal the value of payments made for the work actually performed by DBE companies. In addition, a DBE must perform a commercially useful function on the contract to be counted. A commercially useful function is generally performed when the DBE is responsible for the work and is carrying out its responsibilities by actually performing, managing, and supervising the work involved. The Department and Contractor are governed by the provisions of 49 CFR part 26.55(c) on questions of commercially useful functions as it affects the work. Specific counting guidelines are provided in 49 CFR part 26.55, the provisions of which govern over the summary contained herein.

(a) DBE as the Contractor: 100% goal credit for that portion of the work performed by the DBE's own forces, including the cost of materials and supplies. Work that a DBE subcontracts to a non-DBE firm does not count toward the DBE goals.

(b) DBE as a joint venture Contractor: 100% goal credit for that portion of the total dollar value of the contract equal to the distinct, clearly defined portion of the work performed by the DBE's own forces.

(c) DBE as a subcontractor: 100% goal credit for the work of the subcontract performed by the DBE's own forces, including the cost of materials and supplies. Work that a DBE subcontractor in turn subcontracts to a non-DBE firm does not count toward the DBE goal.

(d) DBE as a trucker: 100% goal credit for trucking participation provided the DBE is responsible for the management and supervision of the entire trucking operation for which it is responsible. At least one truck owned, operated, licensed and insured by the DBE must be used on the contact. Credit will be given for the full value of all such DBE trucks operated using DBE employed drivers. Goal credit will be limited to the value of the reasonable fee or commission received by the DBE if trucks are leased from a non-DBE company.

(e) DBE as a material supplier:

(1) 60% goal credit for the cost of the materials or supplies purchased from a DBE regular dealer.

(2) 100% goal credit for the cost of materials or supplies obtained from a DBE manufacturer.

(3) 100% credit for the value of reasonable fees and commissions for the procurement of materials and supplies if not a regular dealer or manufacturer.

GOOD FAITH EFFORT PROCEDURES. If the bidder cannot obtain sufficient DBE commitments to meet the contract goal, the bidder must document in the Utilization Plan the good faith efforts made in the attempt to meet the goal. This means that the bidder must show that all necessary and reasonable steps were taken to achieve the contract goal. Necessary and reasonable steps are those which could reasonably be expected to obtain sufficient DBE participation. The Department will consider the quality, quantity and intensity of the kinds of efforts that the bidder has made. Mere *pro forma* efforts are not good faith efforts; rather, the bidder is expected to have taken those efforts that would be reasonably expected of a bidder actively and aggressively trying to obtain DBE participation sufficient to meet the contract goal.

(a) The following is a list of types of action that the Department will consider as part of the evaluation of the bidder's good faith efforts to obtain participation. These listed factors are not intended to be a mandatory checklist and are not intended to be exhaustive. Other factors or efforts brought to the attention of the Department may be relevant in appropriate cases, and will be considered by the Department.

(1) Soliciting through all reasonable and available means (e.g. attendance at pre-bid meetings, advertising and/or written notices) the interest of all certified DBE companies that have the capability to perform the work of the contract. The bidder must solicit this interest within sufficient time to allow the DBE companies to respond to the solicitation. The bidder must determine with certainty if the DBE companies are interested by taking appropriate steps to follow up initial solicitations.

(2) Selecting portions of the work to be performed by DBE companies in order to increase the likelihood that the DBE goals will be achieved. This includes, where appropriate, breaking out contract work items into economically feasible units to facilitate DBE participation, even when the prime contractor might otherwise prefer to perform these work items with its own forces.

(3) Providing interested DBE companies with adequate information about the plans, specifications, and requirements of the contract in a timely manner to assist them in responding to a solicitation.

(4) a. Negotiating in good faith with interested DBE companies. It is the bidder's responsibility to make a portion of the work available to DBE subcontractors and suppliers and to select those portions of the work or material needs consistent with the available DBE subcontractors and suppliers, so as to facilitate DBE participation. Evidence of such negotiation includes the names, addresses, and telephone numbers of DBE companies that were considered; a description of the information provided regarding the plans and specifications for the work selected for subcontracting; and evidence as to why additional agreements could not be reached for DBE companies to perform the work.

b. A bidder using good business judgment would consider a number of factors in negotiating with subcontractors, including DBE subcontractors, and would take a

firm's price and capabilities as well as contract goals into consideration. However, the fact that there may be some additional costs involved in finding and using DBE companies is not in itself sufficient reason for a bidder's failure to meet the contract DBE goal, as long as such costs are reasonable. Also, the ability or desire of a prime contractor to perform the work of a contract with its own organization does not relieve the bidder of the responsibility to make good faith efforts. Prime contractors are not, however, required to accept higher quotes from DBE companies if the price difference is excessive or unreasonable.

(5) Not rejecting DBE companies as being unqualified without sound reasons based on a thorough investigation of their capabilities. The contractor's standing within its industry, membership in specific groups, organizations, or associations and political or social affiliations (for example union vs. non-union employee status) are not legitimate causes for the rejection or non-solicitation of bids in the contractor's efforts to meet the project goal.

(6) Making efforts to assist interested DBE companies in obtaining bonding, lines of credit, or insurance as required by the recipient or contractor.

(7) Making efforts to assist interested DBE companies in obtaining necessary equipment, supplies, materials, or related assistance or services.

(8) Effectively using the services of available minority/women community organizations; minority/women contractors' groups; local, state, and Federal minority/women business assistance offices; and other organizations as allowed on a case-by-case basis to provide assistance in the recruitment and placement of DBE companies.

(b) If the Department determines that the Contractor has made a good faith effort to secure the work commitment of DBE companies to meet the contract goal, the Department will award the contract provided that it is otherwise eligible for award. If the Department determines that a good faith effort has not been made, the Department will notify the bidder of that preliminary determination by contacting the responsible company official designated in the Utilization Plan. The preliminary determination shall include a statement of reasons why good faith efforts have not been found, and may include additional good faith efforts that the bidder could take. The notification will designate a five (5) working day period during which the bidder shall take additional efforts. The bidder is not limited by a statement of additional efforts, but may take other action beyond any stated additional efforts in order to obtain additional DBE commitments. The bidder shall submit an amended Utilization Plan if additional DBE commitments to meet the contract goal are secured. If additional DBE commitments sufficient to meet the contract goal are not secured, the bidder shall report the final good faith efforts made in the time allotted. All additional efforts taken by the bidder will be considered as part of the bidder's good faith efforts. If the bidder is not able to meet the goal after taking additional efforts, the Department will make a pre-final determination of the good faith efforts of the bidder and will notify the designated responsible company official of the reasons for an adverse determination.

(c) The bidder may request administrative reconsideration of a pre-final determination adverse to the bidder within the five (5) working days after the notification date of the determination by delivering the request to the Department of Transportation, Bureau of Small Business Enterprises, Contract Compliance Section, 2300 South Dirksen Parkway, Room 319, Springfield, Illinois 62764 (Telefax: (217)785-1524). Deposit of the request in the United States mail on or before the fifth business day shall not be deemed delivery. The pre-final determination shall become final if a request is not made and delivered. A request may provide additional written documentation and/or argument concerning the issue of whether an adequate good faith effort was made to meet the contract goal. In addition, the request shall be considered a consent by the bidder to extend the time for award. The request will be forwarded to the Department's Reconsideration Officer. The Reconsideration Officer will extend an opportunity to the bidder to meet in person in order to consider all issues of whether the bidder made a good faith effort to meet the goal. After the review by the Reconsideration Officer, the bidder will be sent a written decision within ten (10) working days after receipt of the request for reconsideration, explaining the basis for finding that the bidder did or did not meet the goal or make adequate good faith efforts to do so. A final decision by the Reconsideration Officer that a good faith effort was made shall approve the Utilization Plan submitted by the bidder and shall clear the contract for award. A final decision that a good faith effort was not made shall render the bid nonresponsive.

CONTRACT COMPLIANCE. Compliance with this Special Provision is an essential part of the contract. The Department is prohibited by federal regulations from crediting the participation of a DBE included in the Utilization Plan toward either the contract goal or the Department's overall goal until the amount to be applied toward the goals has been paid to the DBE. The following administrative procedures and remedies govern the compliance by the Contractor with the contractual obligations established by the Utilization Plan. After approval of the Plan and award of the contract, the Utilization Plan and individual DBE Participation Statements become part of the contract. If the contractor did not succeed in obtaining enough DBE participation to achieve the advertised contract goal, and the Utilization Plan was approved and contract awarded based upon a determination of good faith, the total dollar value of DBE work calculated in the approved Utilization Plan as a percentage of the awarded contract value shall become the amended contract goal.

(a) No amendment to the Utilization Plan may be made without prior written approval from the Department's Bureau of Small Business Enterprises. All requests for amendment to the Utilization Plan shall be submitted to the Department of Transportation, Bureau of Small Business Enterprises, Contract Compliance Section, 2300 South Dirksen Parkway, Room 319, Springfield, Illinois 62764. Telephone number (217) 785-4611. Telefax number (217) 785-1524.

(b) All work indicated for performance by an approved DBE shall be performed, managed and supervised by the DBE executing the Participation Statement. The Contractor shall not terminate for convenience a DBE listed in the Utilization Plan and then perform the work of the terminated DBE with its own forces, those of an affiliate or those of another subcontractor, whether DBE or not, without first obtaining the written consent of the Bureau of Small Business Enterprises to amend the Utilization Plan. If a DBE listed in

the Utilization Plan is terminated for reasons other than convenience, or fails to complete its work on the contract for any reason, the Contractor shall make good faith efforts to find another DBE to substitute for the terminated DBE. The good faith efforts shall be directed at finding another DBE to perform at least the same amount of work under the contract as the DBE that was terminated, but only to the extent needed to meet the contract goal or the amended contract goal. The Contractor shall notify the Bureau of Small Business Enterprises of any termination for reasons other than convenience, and shall obtain approval for inclusion of the substitute DBE in the Utilization Plan. If good faith efforts following a termination of a DBE for cause are not successful, the Contractor shall contact the Bureau and provide a full accounting of the efforts undertaken to obtain substitute DBE participation. The Bureau will evaluate the good faith efforts in light of all circumstances surrounding the performance status of the contract, and determine whether the contract goal should be amended.

(c) The Contractor shall maintain a record of payments for work performed to the DBE participants. The records shall be made available to the Department for inspection upon request. After the performance of the final item of work or delivery of material by a DBE and final payment therefor to the DBE by the Contractor, but not later than thirty (30) calendar days after payment has been made by the Department to the Contractor for such work or material without regard to any retainage withheld by the Department, the Contractor shall submit a DBE Payment Report on Department form SBE 2115 to the District Engineer. If full and final payment has not been made to the DBE, the Report shall indicate whether a disagreement as to the payment required exists between the Contractor and the DBE or if the Contractor believes that the work has not been satisfactorily completed. If the Contractor does not have the full amount of work indicated in the Utilization Plan performed by the DBE companies indicated in the Plan, the Department will deduct from contract payments to the Contractor the amount of the goal not achieved as liquidated and ascertained damages.

(d) The Department reserves the right to withhold payment to the Contractor to enforce the provisions of this Special Provision. Final payment shall not be made on the contract until such time as the Contractor submits sufficient documentation demonstrating achievement of the goal in accordance with this Special Provision or after liquidated damages have been determined and collected.

EPOXY COATINGS FOR STEEL REINFORCEMENT (BDE)

Effective: April 1, 2003

Revise Article 1006.10(b)(2) of the Standard Specifications to read:

"(2) Epoxy Coated Reinforcement Bars. Epoxy coated reinforcement bars shall conform to the requirements of AASHTO M 284M (M 284), except:

a. The maximum thickness of epoxy coating on spiral reinforcement, coated after fabrication, shall be 0.5 mm (20 mils).

b. No more than eight of the holidays permitted shall be in any 300 mm (1 ft) of length for continuity of coating.

The epoxy coating applicator shall be certified under the Concrete Reinforcing Steel Institute's (CRSI) Epoxy Plant Certification Program.

The epoxy coater shall provide access for the Engineer at any time during production or shipping. Random bars may be checked at the epoxy coater's facility or the jobsite for coating uniformity, thickness and discontinuity; cracks on the bends; and other damaged areas. Upon request, the coater shall provide samples for testing by the Engineer.

Bars may be sheared or sawn to length after coating, provided end damage to coating does not extend more than 15 mm (1/2 in.) back and the cut end is patched before any visible oxidation appears. Flame cutting will not be permitted."

Add the following paragraph after the first paragraph of Article 1006.11(b) of the Standard Specifications:

"The epoxy coating applicator shall be certified under the Concrete Reinforcing Steel Institute's (CRSI) Epoxy Plant Certification Program."

EPOXY COATING ON REINFORCEMENT (BDE)

Effective: April 1, 1997 Revised: January 1, 2003

For work outside the limits of bridge approach pavement, all references to epoxy coating in the Highway Standards and Standard Specifications for reinforcement, tie bars and chair supports will not apply for pavement, shoulders, curb, gutter, combination curb and gutter and median.

EROSION AND SEDIMENT CONTROL DEFICIENCY DEDUCTION (BDE)

Effective: August 1, 2001 Revised: November 1, 2001

When the Engineer is notified or determines an erosion and/or sediment control deficiency(s) exists, he/she will direct the Contractor in writing to correct the deficiency. The Contractor shall then correct the deficiency within 24 hours. The deficiency may be any lack of repair, maintenance, or implementation of erosion and/or sediment control devices included in the contract, or any failure to comply with the conditions of the National Pollutant Discharge Elimination System (NPDES) Storm Water Permit for Construction Site Activities.

If the Contractor fails to correct the deficiency(s) within 24 hours, a daily monetary deduction will be imposed for each calendar day or fraction thereof the deficiency exists. The time period will begin with the initial written notification to the Contractor and end with the Engineer's acceptance of the corrected work. The per calendar day deduction will be either $1000.00 or 0.05 percent of the awarded contract value, whichever is greater.

If the Contractor fails to respond, the Engineer may correct the deficiencies and deduct the cost from monies due or which may become due the Contractor. This corrective action shall in no way relieve the Contractor of his/her contractual requirements or responsibilities.

FLAGGER VESTS (BDE)

Effective: April 1, 2003

Revise the first sentence of Article 701.04(c)(1) of the Standard Specifications to read:

"The flagger shall be stationed to the satisfaction of the Engineer and be equipped with a fluorescent orange, fluorescent yellow/green or a combination of fluorescent orange and fluorescent yellow/green vest meeting the requirements of the American National Standards Institute specification ANSI/ISEA 107-1999 for Conspicuity Class 2 garments and approved flagger traffic control signs conforming to Standard 702001 and Article 702.05(e)."

Revise Article 701.04(c)(6) of the Standard Specifications to read:

"(6) Nighttime Flagging. The flagger station shall be lit by additional overhead lighting other than streetlights. The flagger shall be equipped with a fluorescent orange or fluorescent orange and fluorescent yellow/green garment meeting the requirements of the American National Standards Institute specification ANSI/ISEA 107-1999 for Conspicuity Class 2 garments."

FLUORESCENT ORANGE SHEETING ON DRUMS (BDE)

Effective: November 1, 2000 Revised: January 1, 2003

Revise the first sentence of the first paragraph of Article 702.03(e) of the Standard Specifications to read:

"Drums shall be nonmetallic and have alternating reflectorized Type AA or Type AP fluorescent orange and reflectorized white horizontal, circumferential stripes."

FREEZE-THAW RATING (BDE)

Effective: November 1, 2002

Revise the first sentence of Article 1004.02(f) of the Standard Specifications to read:

"When coarse aggregate is used to produce portland cement concrete for base course, base course widening, pavement, driveway pavement, sidewalk, shoulders, curb, gutter, combination curb and gutter, median, paved ditch or their repair using concrete, the

gradation permitted will be determined from the results of the Department's Freeze-Thaw Test."

HAND VIBRATOR (BDE)

Effective: November 1, 2003

Add the following paragraph to Article 1103.17(a) of the Standard Specifications:

"The vibrator shall have a non-metallic head for areas containing epoxy coated reinforcement. The head shall be coated by the manufacturer. The hardness of the non-metallic head shall be less than the epoxy coated reinforcement, resulting in no damage to the epoxy coating. Slip-on covers will not be allowed."

IMPACT ATTENUATORS, TEMPORARY (BDE)

Effective: November 1, 2003

Description. This work shall consist of furnishing, installing, maintaining, and removing temporary impact attenuators of the category and test level specified.

Materials. Materials shall meet the requirements of the impact attenuator manufacturer and the following:

	Item	Article/Section
(a)	Fine Aggregate (Note 1)	1003.01
(b)	Steel Posts, Structural Shapes, and Plates	1006.04
(c)	Rail Elements, End Section Plates, and Splice Plates	1006.25
(d)	Bolts, Nuts, Washers and Hardware	1006.25
(e)	Hollow Structural Tubing	1006.27(b)
(f)	Wood Posts and Wood Blockouts	1007.01, 1007.02, 1007.06
(g)	Preservative Treatment	1007.12
(h)	Rapid Set Mortar (Note 2)	

Note 1. Fine aggregate shall be FA-1 or FA-2, Class A quality. The sand shall be unbagged and shall have a maximum moisture content of five percent.

Note 2. Rapid set mortar shall be obtained from the Department's approved list of Packaged, Dry, Rapid Hardening Cementitous Materials for Concrete Repairs. For a rapid set mortar mixture, one part packaged rapid set cement shall be combined with two parts fine aggregate, by volume or a packaged rapid set mortar shall be used. Mixing of the rapid set mortar shall be according to the manufacturer's instructions.

CONSTRUCTION REQUIREMENTS

General. Impact Attenuators shall meet the testing criteria contained in National Cooperative Highway Research Program (NCHRP) Report 350 for the test level specified and shall be on the Department's approved list.

Installation. Regrading of slopes or approaches for the installation shall be as shown on the plans.

Attenuator bases, when required by the manufacturer, shall be constructed on a prepared subgrade according to the manufacturer's specifications. The surface of the base shall be slightly sloped or crowned to facilitate drainage.

Impact attenuators shall be installed according to the manufacturer's specifications and include all necessary transitions between the impact attenuator and the item to which it is attached.

When water filled attenuators are used between November 1 and April 15, they shall contain anti-freeze according to the manufacturer's recommendations.

Markings. Sand module impact attenuators shall be striped with alternating reflectorized Type AA or Type AP fluorescent orange and reflectorized white horizontal, circumferential stripes. There shall be at least two of each stripe on each module.

Other types of impact attenuators shall have a terminal marker applied to their nose and reflectors along their sides.

Maintenance. All maintenance of the impact attenuators shall be the responsibility of the Contractor until removal is directed by the Engineer.

Relocate. When relocation of temporary impact attenuators is specified, they shall be removed, relocated and reinstalled at the new location. The reinstallation requirements shall be the same as those for a new installation.

Removal. When the Engineer determines the temporary impact attenuators are no longer required, the installation shall be dismantled with all hardware becoming the property of the Contractor.

Surplus material shall be disposed of according to Article 202.03. Anti-freeze, when present, shall be disposed of/recycled according to local ordinances.

When impact attenuators have been anchored to the pavement, the anchor holes shall be repaired with rapid set mortar Only enough water to permit placement and consolidation by rodding shall be used and the material shall be struck-off flush.

Method of Measurement. This work will be measured for payment as each, where each is defined as one complete installation.

Basis of Payment. This work will be paid for at the contract unit price per each for IMPACT ATTENUATORS, TEMPORARY (FULLY REDIRECTIVE); IMPACT ATTENUATORS, TEMPORARY (NON-REDIRECTIVE); IMPACT ATTENUATORS, RELOCATE (FULLY REDIRECTIVE); or IMPACT ATTENUATORS, RELOCATE (NON-REDIRECTIVE); of the test level specified.

Regrading of slopes or approaches will be paid for according to Section 202 and/or Section 204 of the Standard Specifications.

LIME GRADATION REQUIREMENTS (BDE)

Effective: November 1, 2002

Revise Articles 1012.03(e) and 1012.04(e) of the Standard Specifications to modify the maximum percent retained on the 150 µm (No. 100) sieve from “25” to “30”.

PARTIAL PAYMENTS (BDE)

Effective: September 1, 2003

Revise Article 109.07 of the Standard Specifications to read:

“**109.07 Partial Payments.** Partial payments will be made as follows:

(a) Progress Payments. At least once each month, the Engineer will make a written estimate of the amount of work performed in accordance with the contract, and the value thereof at the contract unit prices. The amount of the estimate approved as due for payment will be vouchered by the Department and presented to the State Comptroller for payment. No amount less than $1000.00 will be approved for payment other than the final payment.

The failure to perform any requirement, obligation, or term of the contract by the Contractor shall be reason for withholding any progress payments until the Department determines that compliance has been achieved. Furthermore, progress payments may be reduced by liens filed pursuant to Section 23(c) of the Mechanics Lien Act, 770 ILCS 60/23(c).

(b) Material Allowances. At the discretion of the Department, payment may be made for materials, prior to their use in the work, when satisfactory evidence is presented by the Contractor. Satisfactory evidence includes justification for the allowance (to expedite the work, meet project schedules, regional or national material shortages, etc.), documentation of material and transportation costs, and evidence that such material is properly stored on the project or at a secure location acceptable and accessible to the Department.

Material allowances will be considered only for nonperishable materials when the cost, including transportation, exceeds $10,000 and such materials are not expected to be utilized within 60 days of the request for the allowance. For contracts valued under $500,000, the minimum $10,000 requirement may be met by combining the principal (material) product of no more than two contract items. An exception to this two item limitation may be considered for any contract regardless of value for items in which material (products) are similar except for type and/or size.

Material allowances shall not exceed the value of the contract items in which used and shall not include the cost of installation or related markups. Amounts paid by the Department for material allowances will be deducted from estimates due the Contractor as the material is used. Two-sided copies of the Contractor's cancelled checks for materials and transportation must be furnished to the Department within 60 days of payment of the allowances or the amounts will be reclaimed by the Department."

PAYMENTS TO SUBCONTRACTORS (BDE)

Effective: June 1, 2000 Revised: September 1, 2003

Federal regulations found at 49 CFR §26.29 mandate the Department to establish a contract clause to require Contractors to pay subcontractors for satisfactory performance of their subcontracts no later than 30 days from the receipt of each payment made to the Contractor.

State law addresses the timing of payments to be made to subcontractors. Section 7 of the Prompt Payment Act, 30 ILCS 540/7, generally requires that when a Contractor receives any payment from the Department, the Contractor is required to make corresponding, proportional payments to each subcontractor performing work within 15 calendar days after receipt of the state payment. Section 7 of the State Prompt Payment Act further provides that interest in the amount of 2% per month, in addition to the payment due, shall be paid to any subcontractor by the Contractor if the payment required by the Act is withheld or delayed without reasonable cause. The Act also provides that the time for payment required and the calculation of any interest due applies to transactions between subcontractors and lower-tier subcontractors throughout the contracting chain.

This Special Provision establishes the required federal contract clause, and adopts the 15 calendar day requirement of the Act for purposes of compliance with the federal regulation regarding payments to subcontractors. This contract is subject to the following payment obligations.

As progress payments are made to the Contractor in accordance with Article 109.07 of the Standard Specifications for Road and Bridge Construction, the Contractor shall make a corresponding partial payment within 15 calendar days to each subcontractor in proportion to the work satisfactorily completed by each subcontractor. The proportionate amount of partial payment due to each subcontractor shall be determined by the quantities measured or otherwise determined as eligible for payment by the Department and included in the progress payment to the Contractor. Subcontractors shall be paid in full within 15 calendar days after the subcontractor's work has been satisfactorily completed. The Contractor shall hold no retainage from the subcontractors.

This Special Provision does not create any rights in favor of any subcontractor against the State of Illinois or authorize any cause of action against the State of Illinois on account of any payment, nonpayment, delayed payment or interest claimed by application of the State Prompt Payment Act. The Department will neither determine the reasonableness of any cause for delay of payment nor enforce any claim to payment, including interest. Moreover, the Department will not approve any delay or postponement of the 15 day requirement. State law creates remedies available to any subcontractor or material supplier, regardless of tier, who has not been paid for work properly performed or material furnished. These remedies are a lien against public funds set forth in Section 23(c) of the Mechanics Lien Act, 770 ILCS 60/23(c), and a recovery on the Contractor's payment bond in accordance with the Public Construction Bond Act, 30 ILCS 550.

PORTLAND CEMENT CONCRETE (BDE)

Effective: November 1, 2002

Add the following paragraph after the fourth paragraph of Article 1103.01(b) of the Standard Specifications:

> "The truck mixer shall be approved before use according to the Bureau of Materials and Physical Research's Policy Memorandum, "Approval of Concrete Plants and Delivery Trucks"."

Add the following paragraph after the first paragraph of Article 1103.01(c) of the Standard Specifications:

> "The truck agitator shall be approved before use according to the Bureau of Materials and Physical Research's Policy Memorandum, "Approval of Concrete Plants and Delivery Trucks"."

Add the following paragraph after the first paragraph of Article 1103.01(d) of the Standard Specifications:

> "The nonagitator truck shall be approved before use according to the Bureau of Materials and Physical Research's Policy Memorandum, "Approval of Concrete Plants and Delivery Trucks"."

Revise the first sentence of the first paragraph of Article 1103.02 of the Standard Specifications to read:

"The plant shall be approved before production begins according to the Bureau of Materials and Physical Research's Policy Memorandum, "Approval of Concrete Plants and Delivery Trucks"."

PORTLAND CEMENT CONCRETE PATCHING (BDE)

Effective: January 1, 2001 Revised: January 1, 2004

Revise Note 1 of Article 442.02 of the Standard Specifications, to read:

"Note 1. When patching ramp pavements and two lane pavements with two way traffic, Class PP-2, PP-3, or PP-4 concrete shall be used for Class A, Class B and Class C patching. For all other pavements, Class PP-1, PP-2, PP-3, or PP-4 concrete shall be used, at the Contractor's option, for Class A, Class B and Class C patching."

Delete Note 2 of Article 442.02 of the Standard Specifications.

Add the following to Article 442.02 of the Standard Specifications:

"(l) Calcium Chloride (Note 5) 1013.01

Note 5. The calcium chloride accelerator, when permitted by the Department, shall be Type L (Liquid) with a minimum of 32.0 percent by mass (weight) of calcium chloride."

Revise the first paragraph of Article 442.06(e) of the Standard Specifications to read:

"(e) Concrete Placement. For Class A, Class B and Class C Patches, concrete shall be placed according to Article 420.07 and governed by the limitations set forth in Article 1020.14, except that the maximum temperature of the mixed concrete immediately before placing shall be 35 °C (96 °F), the required use of an approved retarding admixture when the plastic concrete reaches 30 °C (85 °F) shall not apply."

Revise the first paragraph of Article 442.06(h) of the Standard Specifications to read:

"(h) Curing and Protection. In addition to Article 1020.13, when the air temperature is less than 13 °C (55 °F), the Contractor shall cover the patch with minimum R12 insulation until opening strength is reached. Insulation is optional when the air temperature is 13 °C - 35 °C (55 °F - 96 °F). Insulation shall not be placed when the air temperature is greater than 35 °C (96 °F)."

Revise the second paragraph of Article 701.05(e)(1)d.1. of the Standard Specifications to read:

"No open holes, broken pavement, or partially filled holes shall remain overnight for bituminous patching or when the Department specifies only Class PP-2, PP-3, or PP-4 concrete be used. The only exception is conditions beyond the control of the Contractor."

Revise Article 701.05(e)(2)b. of the Standard Specifications to read:

"b. Strength Tests. For patches constructed with Class PP-1, PP-2, PP-3, or PP-4 concrete, the pavement may be opened to traffic when test specimens cured with the patches have obtained a minimum flexural strength of 4150 kPa (600 psi) or a minimum compressive strength of 22,100 kPa (3200 psi) according to Article 1020.09.

For patches constructed with Class PP-2, PP-3, or PP-4 concrete which can obtain a minimum flexural strength of 4150 kPa (600 psi) or a minimum of

compressive strength of 22,100 kPa (3200 psi) in 16 hours, the pavement may be opened to traffic at a lower opening strength. The specimens cured with the patches shall have obtained a minimum flexural strength of 2050 kPa (300 psi) or a minimum compressive strength of 11,000 kPa (1600 psi) according to Article 1020.09, to permit opening pavement to traffic.

With the approval of the Engineer, concrete strength may be determined according to AASHTO T 276. The strength-maturity relationship shall be developed from concrete which has an air content near the upper specification limit. The strength-maturity relationship shall be re-established if the mix design or materials are changed."

Revise Article 701.05(e)(2)c. of the Standard Specifications to read:

"c. Construction Operations. For Class PP-2, PP-3, or PP-4 concrete used on ramp pavements and two lane pavements with two way traffic, or when the Department specifies only Class PP-2, PP-3, or PP-4 concrete be used for other pavements, Contractor construction operations shall be performed in a manner which allows the patches to be opened the same day and before nightfall. If patches are not opened before nightfall, the additional traffic control shall be at the Contractor's expense. Any time patches cannot be opened before nightfall, the Contractor shall change subsequent construction operations or the mix design. The changes shall be at no additional cost to the Department."

Revise Table 1 of Article 1020.04 of the Standard Specifications by replacing Class PP concrete with the following:

"TABLE 1. CLASSES OF PORTLAND CEMENT CONCRETE AND MIX DESIGN CRITERIA				
Class of Concrete	Use	Specification Section Reference	Cement Factor kg/cu m (cwt/cu yd)	Max. Water/Cement Ratio kg/kg (lb/lb)
PP-1	PCC Pavement Patching Bridge Deck Patching	442	Type I Cement 385 to 445 (6.50 to 7.50) Type III Cement 365 to 425 (6.20 to 7.20)	0.44
PP-2	PCC Pavement Patching Bridge Deck Patching	442	Type I Cement 435 (7.35)	0.38
PP-3	PCC Pavement Patching Bridge Deck Patching	442	Type III Cement 435 (7.35)	0.35
PP-4	PCC Pavement Patching Bridge Deck Patching	442	Rapid Hardening Cement 355 to 370 (6.00 to 6.25)	0.50

For PP-1, the Contractor has the option to replace the Type I Cement with Class C fly ash or ground granulated blast-furnace slag. The amount of cement replaced shall not exceed 15 percent by mass (weight), at a minimum replacement ratio of 1.5:1.

For PP-2, the Contractor has the option to replace the Type I cement with ground granulated blast-furnace slag. The amount of cement replaced shall not exceed 30 percent by mass (weight), at a minimum replacement ratio of 1:1.

For PP-3, in addition to the cement, 60 kg/cu m (100 lb/cu yd) of ground granulated blast-furnace slag and 30 kg/cu m (50 lb/cu yd) of microsilica are required. For an air temperature greater than 30 °C (85 °F), the Contractor has the option to replace the Type III cement with Type I cement.

For PP-4, the cement shall be from the Department's "Approved List of Packaged, Dry, Rapid Hardening Cementitious Materials for Concrete Repairs".

TABLE 1. (CONT'D) CLASSES OF PORTLAND CEMENT CONCRETE AND MIX DESIGN CRITERIA					
Class of Concrete	Slump, mm (in.)	Mix Design Compressive Strength, kPa (psi)	Mix Design Flexural Strength, kPa (psi)	Air Content, %	Coarse Aggregate Gradations Permitted
		Hours	Hours		
		48	48		
PP – 1	100 (4) Max	22,100 (3200)	4150 (600)	4.0 – 7.0	CA-7, CA-11, CA-13, CA14, or CA-16
PP – 2	150 (6) Max	22,100 (3200)	4150 (600)	4.0 – 6.0	CA-7, CA-11, CA-13, CA14, or CA-16
PP – 3	100 (4) Max	22,100 (3200)	4150 (600)	4.0 – 6.0	CA-7, CA-11, CA-13, CA14, or CA-16
PP – 4	150 (6) Max	22,100 (3200)	4150 (600)	4.0 – 6.0	CA-7, CA-11, CA-13, CA14, or CA-16

For PP-1, PP-2, PP-3 or PP-4; only CA-13, CA-14, or CA-16 may be used for bridge deck patching. In addition, the mix design strength at 48 hours shall be increased to 27,500 kPa (4,000 psi) compressive or 4,650 kPa (675 psi) flexural for bridge deck patching.

For PP-1, the slump may be increased to 150 mm (6 in.) Max if a high range water-reducing admixture is used."

Delete Article 1020.05(g) of the Standard Specifications.

PRECAST CONCRETE (BDE)

Effective: July 1, 1999 Revised: January 1, 2002

Description. This special provision identifies non-prestressed, precast concrete products which shall be produced according to the Department's current, "Quality Control/Quality Assurance Program for Precast Concrete Products".

Products. The list of products is as follows:

Product Class	Precast Item
Box Culvert	Precast Concrete Box Culverts
Pipe	Reinforced Concrete Culvert, Storm Drain and Sewer Pipe
	Concrete Sewer, Storm Drain and Culvert Pipe
	Reinforced Concrete Elliptical Culvert, Storm Drain and Sewer Pipe
	Concrete Drain Tile
	Reinforced Concrete Arch Culvert, Storm Drain and Sewer Pipe
	Concrete Headwall for Pipe Drains
	Precast Reinforced Concrete Flared End Sections and Elliptical Flared End Sections
	Precast Reinforced Concrete Pipe Elbows, Tees and Collars
Structure	Precast Concrete Members
Block/Brick	Erosion Control: Concrete Block Riprap, Block Revetment Mat, and Articulated Block Mat
	Concrete Building Brick
	Concrete Masonry Units
Drainage Structure	Precast Reinforced Concrete Catch Basins, Manholes, Inlets, Miscellaneous Structures, Valve Vaults and Flat Slab Tops/Bottoms
Barrier	Concrete Barrier
	Temporary Concrete Barrier
Miscellaneous	Right of Way, Drainage, Section and Permanent Survey Markers, Bumper Blocks, Junction Boxes, and Handholes

For precast concrete products which are constructed according to AASHTO M 86, M 170, M 178, M 199, M 206, M 207, M 259, or M 273; portland or blended hydraulic cement shall be according to Article 1001.01 of the Standard Specifications, except the pozzolan constituent in the Type IP or Type I(PM) cement shall be fly ash. In addition, the minimum or maximum combination of a portland cement and a cementitious material shall be according to the AASHTO M specification. The cementitious material shall be according to Articles 1010.01, 1010.03, 1014.01, 1014.02, 1015.01, 1015.02, 1016.01 and 1016.02.

Acceptance. Products which have been lot or piece inspected and approved by the Department prior to July 1, 1999, will be accepted for use on this contract. Products produced on or after July 1, 1999, will be accepted only if produced according to the Department's current "Quality Control/Quality Assurance Program for Precast Concrete Products".

PREFORMED RECYCLED RUBBER JOINT FILLER (BDE)

Effective: November 1, 2002

Revise Article 503.02(c) of the Standard Specifications to read:

"(c) Preformed Expansion Joint Filler .....1051"

Revise Article 637.02(d) of the Standard Specifications to read:

"(d) Preformed Expansion Joint Filler .....1051"

Add the following Article to Section 1051 of the Standard Specifications:

"1051.10 Preformed Recycled Rubber Joint Filler. Preformed recycled rubber joint filler shall consist of ground tire rubber, free of steel and fabric, combined with ground scrap or waste polyethylene. It shall not have a strong hydrocarbon or rancid odor and shall meet the physical property requirements of ASTM D 1752. Water absorption by volume shall not exceed 5.0 percent."

RAP FOR USE IN BITUMINOUS CONCRETE MIXTURES (BDE)

Effective: January 1, 2000 Revised: April 1, 2002

Revise Article 1004.07 to read:

"**1004.07 RAP Materials.** RAP is reclaimed asphalt pavement resulting from cold milling or crushing of an existing dense graded hot-mix asphalt pavement. RAP must originate from routes or airfields under federal, state or local agency jurisdiction. The Contractor shall supply documentation that the RAP meets these requirements.

(a) Stockpiles. The Contractor shall construct individual, sealed RAP stockpiles meeting one of the following definitions. No additional RAP will be allowed on top of the pile after the pile has been sealed.

(1) Homogeneous. Homogeneous RAP stockpiles shall consist of RAP from Class I/ Superpave, or equivalent mixtures only and represent the same aggregate quality, but shall be at least C quality or better, the same type of crushed aggregate (either crushed natural aggregate, ACBF slag, or steel slag), similar gradation and similar AC content. If approved by the Engineer, combined single pass surface/binder millings may be considered "homogenous", with a quality rating dictated by the lowest coarse aggregate quality present in the mixture. Homogenous stockpiles shall meet the requirements of Article 1004.07(d). Homogeneous RAP stockpiles not meeting these requirements may be processed (crushing and screening) and retested.

(2) Conglomerate. Conglomerate RAP stockpiles shall consist of RAP from Class I/ Superpave, or equivalent mixtures only. The coarse aggregate in this RAP shall be crushed aggregate only and may represent more than one aggregate type and/or quality but shall be at least C quality or better. This RAP may have an inconsistent gradation and/or asphalt cement content prior to processing. All conglomerate RAP shall be processed prior to testing by crushing to where all RAP shall pass the 16 mm (5/8 in.) or smaller screen. Conglomerate RAP stockpiles shall not contain steel slag or other expansive material as determined by the Department. Conglomerate RAP stockpiles shall meet the requirements of Article 1004.07(d).

(3) Conglomerate "D" Quality (DQ). Conglomerate DQ RAP stockpiles shall consist of RAP containing coarse aggregate (crushed or round) that is at least D quality or better. This RAP may have an inconsistent gradation and/or asphalt content. Conglomerate DQ RAP stockpiles shall not contain steel slag or other expansive material as determined by the Department. Conglomerate DQ RAP shall meet the requirements of Article 1004.07(d).

Reclaimed Superpave Low ESAL IL-9.5L surface mixtures shall only be placed in conglomerate DQ RAP stockpiles due to the potential for rounded aggregate.

(4) Other. RAP stockpiles that do not meet the requirements of the stockpile categories listed above shall be classified as "Other". "Other" RAP stockpiles shall not be used in any of the Department's bituminous mixtures.

(b) Use. The allowable use of a RAP stockpile shall be set by the lowest quality of coarse aggregate in the RAP stockpile. Class I/Superpave surface mixtures are designated as containing Class B quality coarse aggregate only. Superpave Low ESAL IL-19.0L binder and IL-9.5L surface mixtures are designated as Class C quality coarse aggregate only. Class I/Superpave binder mixtures, bituminous base course mixtures, and bituminous base course widening mixtures are designated as containing Class C quality coarse aggregate only. Bituminous stabilized subbase and BAM shoulders are designated as containing Class D quality coarse aggregate only. Any mixture not listed above shall have the designated quality determined by the Department.

RAP containing steel slag or other expansive material, as determined by the Department, shall be homogeneous and will be approved for use in Class I/Superpave (including Low ESAL) surface mixtures only. RAP stockpiles for use in Class I/Superpave mixtures (including Low ESAL), base course, base course widening and Class B mixtures shall be either homogeneous or conglomerate RAP stockpiles except conglomerate RAP stockpiles shall not be used in Superpave surface mixture Ndesign 50 or greater. RAP for use in bituminous aggregate mixtures (BAM) shoulders and BAM stabilized subbase shall be from homogeneous, conglomerate, or conglomerate DQ stockpiles.

Additionally, RAP used in Class I/Superpave surface mixtures shall originate from milled or crushed mixtures only, in which the coarse aggregate is of Class B quality or better. RAP stockpiles for use in Class I/Superpave (including Low ESAL) binder mixes as well

as base course, base course widening and Class B mixtures shall originate from milled or processed surface mixture, binder mixture, or a combination of both mixtures uniformly blended to the satisfaction of the Engineer, in which the coarse aggregate is of Class C quality or better.

(c) Contaminants. RAP containing contaminants, such as earth, brick, sand, concrete, sheet asphalt, bituminous surface treatment (i.e. chip seal), pavement fabric, etc., will be unacceptable unless the contaminants are removed to the satisfaction of the Engineer. Sheet asphalt shall be stockpiled separately.

(d) Testing. All RAP shall be sampled and tested either during or after stockpiling.

For testing during stockpiling, washed extraction samples shall be run at the minimum frequency of one sample per 450 metric tons (500 tons) for the first 1800 metric tons (2,000 tons) and one sample per 1800 metric tons (2,000 tons) thereafter. A minimum of five tests shall be required for stockpiles less than 3600 metric tons (4,000 tons).

For testing existing stockpiles, the Contractor shall submit a plan for approval to the District proposing a satisfactory method of sampling and testing the RAP pile either in-situ or by restockpiling. The sampling plan shall meet the minimum frequency required above and detail the procedure used to extract representative samples throughout the pile for testing.

Before extraction, each field sample shall be split to test sample size. One of the two test samples from the final split shall be labeled and stored for Department use. The Contractor shall extract the other test sample according to Department procedure. The Engineer reserves the right to test any sample (split or Department-taken) to verify Contractor test results.

All of the extraction results shall be compiled and averaged for asphalt content and gradation. Individual extraction test results, when compared to the averages, will be accepted if within the tolerances listed below.

Parameter	Homogeneous / Conglomerate	Conglomerate "D" Quality
25 mm (1 in.)		± 5%
12.5 mm (1/2 in.)	± 8%	± 15%
4.75 mm (No. 4)	± 6%	± 13%
2.36 mm (No. 8)	± 5%	
1.18 mm (No. 16)		± 15%
600 μm (No. 30)	± 5%	
75 μm (No. 200)	± 2.0%	± 4.0%
AC	± 0.4%	± 0.5%

If more than 20 percent of the individual sieves are out of the gradation tolerances, or if more than 20 percent of the asphalt content test results fall outside the appropriate

tolerances, the RAP will not be allowed to be used in the Department's bituminous concrete mixtures unless the RAP representing the failing tests is removed from the stockpile to the satisfaction of the Engineer. All test data and acceptance ranges shall be sent to the District for evaluation.

With the approval of the Engineer, the ignition oven may be substituted for extractions according to the Illinois Test Procedure, "Calibration of the Ignition Oven for the Purpose of Characterizing Reclaimed Asphalt Pavement (RAP)".

(e) Designs. At the Contractor's option, bituminous concrete mixtures may be constructed utilizing RAP material meeting the above detailed requirements. The amount of RAP included in the mixture shall not exceed the percentages specified in the plans.

RAP designs shall be submitted for volumetric verification. If additional RAP stockpiles are tested and found that no more than 20 percent of the results, as defined under "Testing" herein, are outside of the control tolerances set for the original RAP stockpile and design, and meets all of the requirements herein, the additional RAP stockpiles may be used in the original mix design at the percent previously verified.

(f) Production. The coarse aggregate in all RAP used shall be equal to or less than the nominal maximum size requirement for the bituminous mixture being produced.

To remove or reduce agglomerated material, a scalping screen, crushing unit or comparable sizing device approved by the Engineer shall be used in the RAP feed system to remove or reduce oversized material. If material passing the sizing device adversely affects the mix production or quality of the mix, the sizing device shall be set at a size specified by the Engineer.

If the RAP control tolerances or QC/QA test results require corrective action, the Contractor shall cease production of the mixture containing RAP and either switch to the virgin aggregate design or submit a new RAP design.

STABILIZED SUBBASE AND BITUMINOUS SHOULDERS SUPERPAVE (BDE)

Effective: April 1, 2002 Revised: January 1, 2003

Description. This work shall consist of constructing stabilized subbase and bituminous shoulders Superpave according to Sections 312 and 482 respectively, of the Standard Specifications and the special provision, "Quality Control/Quality Assurance of Bituminous Concrete Mixtures" except as modified herein.

Revise Article 312.03(b) of the Standard Specifications to read:

"(b) RAP Material (Note 3)"

Revise Note 2 of Article 312.03 of the Standard Specifications to read:

"Note 2. Gradation CA 6, CA 10, or CA 12 shall be used."

Revise Note 3 of Article 312.03 of the Standard Specifications to read:

"Note 3. RAP shall meet the requirements of the special provision "RAP for Use in Bituminous Concrete Mixtures". RAP containing steel slag shall be permitted for use in top-lift surface mixtures only."

Revise Note 4 of Article 312.03 of the Standard Specifications to read:

"Note 4. Unless otherwise specified on the plans, the bituminous material shall be performance graded asphalt cement, PG58-22. When more than 15 percent RAP is used, a softer PG binder may be required as determined by the Engineer."

Add the following to Article 312.04 of the Standard Specifications:

"(k) Superpave Gyratory Compactor (Note 6)
(l) Ignition Oven (Note 7)

Note 6. The Superpave gyratory compactor (SGC) shall be used for all laboratory mixture compaction.

Note 7. The ignition oven shall be used for determination of AC content. The ignition oven shall also be used to recover aggregates for all required washed gradations. The Engineer may waive the ignition oven requirement for AC content if the aggregates to be used are known to have ignition AC content calibration factors which exceed 1.5 percent. If the calibration factor exceeds 1.5 percent other IDOT approved methods shall be utilized for determination of AC content."

Revise Article 312.06 of the Standard Specifications to read:

"**312.06 Mixture Design.** The Contractor shall submit mix designs for approval, for each required mixture. Mix designs shall be developed by Level III personnel who have completed the course, "Superpave Mix Design Upgrade". The mixtures shall be designed according to the respective Illinois Modified AASHTO references listed below:

AASHTO MP 2	Standard Specification for Superpave Volumetric Mix Design
AASHTO PP 2	Standard Practice for Short and Long Term Aging of Hot Mix Asphalt (HMA)
AASHTO PP 19	Standard Practice for Volumetric Analysis of Compacted Hot Mix Asphalt (HMA)
AASHTO PP 28	Standard Practice for Designing Superpave HMA
AASHTO T 209	Theoretical Maximum Specific Gravity and Density of Bituminous Paving Mixtures

AASHTO T 312 Preparing and Determining the Density of Hot Mix Asphalt (HMA) Specimens by Means of the Superpave Gyratory Compactor

AASHTO T 308 Determining the Asphalt Content of Hot Mix Asphalt (HMA) by the Ignition Method

(a) Job Mix Formula (JMF). The JMF shall be according to the following limits:

Ingredient	Percent by Dry Weight
Aggregate	94.0 to 96.0
Asphalt Cement	4.0 to 6.0*
Dust/AC Ratio	1.4

*Upper limit may be raised for the lower or top lifts if the Contractor elects to use a highly absorptive coarse and/or fine aggregate requiring more than six percent asphalt. The additional asphalt shall be furnished at no cost to the Department.

When RAP material is being used, the JMF shall be according to the following limits:

Ingredient	Percent by Dry Weight
Virgin Aggregate(s)	46.0 to 96.0
RAP Material(s) (Note 1)	0 to 50
Mineral Filler (if required)	0 to 5.0
Asphalt Cement	4.0 to 7.0
Dust/AC Ratio	1.4

Note 1. If specified on the plans, the maximum percentage of RAP shall be as specified therein.

It is recommended that the selected combined aggregate gradation not pass through the restricted zones specified in Illinois Modified AASHTO MP 2.

(b) Volumetric Requirements.

Design Compactive Effort	Design Air Voids Target (%)
N_{DES} =30	2.0

(c) Determination of Need for Anti-Stripping Additive. The mixture designer shall determine if an additive is needed in the mix to prevent stripping. The determination will be made on the basis of tests performed according to Illinois Modified AASHTO T 283 using 4 in. Marshall bricks. To be considered acceptable by the Engineer as a mixture not susceptible to stripping, the ratio of conditioned to unconditioned split tensile strengths (TSR) shall be equal to or greater than 0.75. Mixtures, either with or without an additive, with TSR values less than 0.75 will be considered unacceptable.

If it is determined that an additive is required, the additive may be hydrated lime, slaked quicklime, or a liquid additive, at the Contractor's option. The liquid additive shall be selected from the Department's list of approved additives and may be limited to those which have exhibited satisfactory performance in similar mixes.

Dry hydrated lime shall be added at a rate of 1.0 to 1.5 percent by weight of total dry aggregate. Slurry shall be added in such quantity as to provide the required amount of hydrated lime solids by weight of total dry aggregate. The exact rate of application for all anti-stripping additives will be determined by the Engineer. The method of application shall be according to Article 406.12 of the Standard Specifications."

Revise Article 312.08 of the Standard Specifications to read:

"**312.08 Mixture Production.** When a hot-mix plant conforming to Article 1102.01 is used, the aggregate shall be dried and heated in the revolving dryer to a temperature of 120 °C (250 °F) to 175 °C (350 °F).

The aggregate and bituminous material used in the bituminous aggregate mixture shall be measured separately and accurately by weight or by volume. When the aggregate is in the mixer, the bituminous material shall be added and mixing continued for a minimum of 35 seconds and until a homogeneous mixture is produced in which all particles of the aggregate are coated. The mixing period, size of the batch and the production rate shall be approved by the Engineer.

The ingredients shall be heated and combined in such a manner as to produce a mixture which, when discharged from the mixer, shall be workable and vary not more 10 °C (20 °F) from the temperature set by the Engineer.

When RAP material(s) is used in the bituminous aggregate mixture, the virgin aggregate(s) shall be dried and heated in the dryer to a temperature that will produce the specified resultant mix temperature when combined with the RAP material.

The heated virgin aggregates and mineral filler shall be combined with RAP material in such a manner as to produce a bituminous mixture which when discharged from the mixer shall not vary more than 15 °C (30 °F) from the temperature set by the Engineer. The combined ingredients shall be mixed for a minimum of 35 seconds and until a homogeneous mixture as to composition and temperature is obtained. The total mixing time shall be a minimum of 45 seconds consisting of dry and wet mixing. Variation in wet and dry mixing times may be permitted, depending on the moisture content and amount of salvaged material used. The mix temperature shall not exceed 175 °C (350 °F). Wide variations in the mixture temperature will be cause for rejection of the mix.

(a) Personnel. The QC Manager and Level I Technician shall have successfully completed the Department’s "Superpave Field Control Course”.

(b) Required Tests. Testing for stabilized subbase and bituminous shoulders shall be conducted to control the production of the bituminous mixture at a frequency not less

than that listed for Non-Class I mixtures in the special provision "QC/QA of Bituminous Concrete Mixtures".

During production, the ratio of minus 75 µm (#200) sieve material to total asphalt cement shall be not less than 0.6 nor more than 1.6, and the moisture content of the mixture at discharge from the mixer shall not exceed 0.5 percent. If at any time the ratio of minus 75 µm (#200) material to asphalt or moisture content of the mixture falls outside the stated limits, production of the mix shall cease. The cause shall be determined and corrective action satisfactory to the Engineer shall be initiated prior to resumption of production.

During production, mixture containing an anti-stripping additive will be tested by the Engineer for stripping according to Illinois Modified AASHTO T 283. If the mixture fails to meet the TSR criteria for acceptance, no further mixture will be accepted until the Contractor takes such action as is necessary to furnish a mixture meeting the criteria.

(c) Control Charts/Limits. Control charts/limits shall be according to QC/QA requirements for Non-Class I Mixtures."

Replace the first paragraph of Article 312.10 of the Standard Specifications with the following:

"**312.10 Placing and Compacting.** After the subgrade has been compacted and is acceptable to the Engineer, the bituminous aggregate mixture shall be spread upon it with a mechanical spreader. The maximum compacted thickness of each lift shall be 150 mm (6 in.) provided the required density is obtained. The minimum compacted thickness of each lift shall be according to the following table:

Nominal Maximum Aggregate Size of Mixture	Minimum Compacted Lift Thickness
CA 12 – 12.5 mm (1/2 in.)	38 mm (1 1/2 in.)
CA 10 - 19 mm (3/4 in.)	57 mm (2 1/4 in.)
CA 6 – 25 mm (1 in.)	76 mm (3 in.)

The surface of each lift shall be clean and dry before succeeding lifts are placed."

Revise Article 482.02 of the Standard Specifications to read:

"**482.02 Materials.** Materials shall meet the requirements of Article 312.03. For the top lift, the aggregate used shall meet the gradation requirements for a CA 10 or CA 12. Blending of aggregates to meet these gradation requirements will be permitted."

In the first sentence of the first paragraph of Article 482.04 of the Standard Specifications change "Class I Binder and Surface Course (Type 1 or Type 2)" to "Superpave Binder and Surface Course".

Revise Article 482.04(c) of the Standard Specifications to read:

"(c) Mixture Production .....312.08"

Revise Article 482.05 of the Standard Specifications to read:

"**482.05 Composition of Bituminous Aggregate Mixture.** The composition of the mixture shall be according to Article 312.06, except that the amount of bitumen used in the top lift shall be increased up to 0.5 percent more than that required in the lower lifts. For resurfacing projects when the Superpave option is used, the bitumen used in the top lift shall not be increased. Superpave mixtures used on the top lift of such shoulders shall meet the gradation requirements of the special provision "Superpave Bituminous Concrete Mixtures".

For shoulder and strip construction, the composition of the Superpave binder and surface course shall be the same as that specified for the mainline pavement."

In the following locations of Section 482 of the Standard Specifications, change "Class I" to "Superpave":

the second paragraph of Article 482.04
the first sentence of the second paragraph of Article 482.06
the first sentence of the fourth paragraph of Article 482.06
the second sentence of the fourth paragraph of Article 482.06
the first sentence of the third paragraph of Article 482.08(b)

Revise the first paragraph of Article 482.06 of the Standard Specifications to read:

"**482.06 Placing and Compacting.** This work shall be according to Article 312.10. The mechanical spreader for the top lift of shoulders shall meet the requirements of Article 1102.03 when the shoulder width is 3 m (10 ft) or greater."

Revise Article 482.09 of the Standard Specifications to read:

"**482.09 Basis of Payment**. When bituminous shoulders are constructed along the edges of the completed pavement structure, this work will be paid for at the contract unit price per square meter (square yard) for BITUMINOUS SHOULDERS SUPERPAVE of the thickness specified. The specified thickness shall be the thickness shown on the plans at the edge of the pavement.

On pavement and shoulder resurfacing projects, the shoulder resurfacing will be paid for at the contract unit price per metric ton (ton) for BITUMINOUS SHOULDERS SUPERPAVE.

The construction of shoulder strips for resurfacing pavements will be paid according to the special provision, "Superpave Bituminous Concrete Mixtures"."

STONE FOR EROSION PROTECTION, SEDIMENT CONTROL, AND ROCKFILL (BDE)

Effective: January 1, 2004

Revise the first, second, and third sentences of Article 281.04(a) of the Standard Specifications to read:

"Class A1 bedding material shall be used with riprap Classes A4, A5, B4, and B5. Class A2 bedding material shall be used with riprap Classes A6, A7, B6, and B7. When filter fabric is used, the following substitutions of bedding material may be made: Quality B may be used in lieu of Quality A; Gradation CA 3 may be used in lieu of Gradation RR 1; and Gradation CA 1 may be used in lieu of Gradation RR 2."

Revise Article 1005.01 of the Standard Specifications to read:

"**1005.01 Stone for Erosion Protection, Sediment Control, and Rockfill.** The material will be sampled and inspected according to the Bureau of Materials and Physical Research's policy memorandum, "Inspection of Stone for Erosion Protection, Sediment Control, and Rockfill". The material shall meet the following requirements.

(a) Description. The material shall be stone, quarried from undisturbed, consolidated deposits (ledges) of rock reasonably free of shale and shaly stone. The ledges shall be sufficiently thick to produce the desired dimensions. The stone shall be reasonably free of laminations, seams, cracks, and other structural defects or imperfections tending to destroy its resistance to weather. Field stone or boulders will not be accepted.

Bedding material shall be crushed stone, crushed gravel, crushed sandstone, or crushed slag meeting the requirements of Article 1004.01(a).

(b) Quality. The stone shall meet the following quality requirements.

(1) Stone for Erosion Protection or Sediment Control. The material shall be quarried from ledges meeting the quality designations listed in the following table.

QUALITY OF STONE FOR EROSION PROTECTION AND SEDIMENT CONTROL		
QUALITY TEST	QUALITY A 2/ 3/ 4/	QUALITY B 2/
Na_2SO_4 Soundness 5 Cycle, AASHTO T 104 1/ Max. % Loss	15	25

1/ As modified by the Department.

2/ Elongated pieces (length is greater than five times the average thickness) shall not exceed ten percent by weight.

3/ The stone, when checked in a full gradation product, shall have a specific gravity (dry) greater than 2.450 as determined by the Department.

4/ The stone shall be reasonably free of chert.

In addition to the above quality requirements, crushed slag used as a bedding material shall also meet the Department's "Test for Leachate".

(2) Stone for Rockfill. The material shall be quarried from ledges consisting of sound, durable rock reasonably free of objectionable, deleterious material as determined by the Department.

(c) Gradation. The stone shall meet the following gradation requirements.

(1) Stone for Erosion Protection or Sediment Control. The material shall meet the gradation limits listed in the following tables. All gradations produced shall be well graded.

BEDDING MATERIAL GRADATIONS					
GRAD. NO.	Percent Passing Sieves				
	100 mm	75 mm	50 mm	37.5 mm	4.75 mm
RR 1		100		53±23	8±8
RR 2	100		53±23		8±8

BEDDING MATERIAL GRADATIONS (ENGLISH)					
GRAD. NO.	Percent Passing Sieves				
	4 in.	3 in.	2 in.	1 1/2 in.	No. 4
RR 1		100		53±23	8±8
RR 2	100		53±23		8±8

EROSION PROTECTION AND SEDIMENT CONTROL GRADATIONS														
Grad. No.	Percent Passing Rock Size (kg)													
	455[1/]	270[1/]	180[1/]	135	75	70[1/]	40	20[1/]	18	5	4	3	1	0.5
RR 3								100			50±20			8±8
RR 4						100			50±20					8±8
RR 5			100				50±20						8±8	
RR 6		100			50±20							8±8		
RR 7	100			50±20						8±8				

EROSION PROTECTION AND SEDIMENT CONTROL GRADATIONS														
Grad. No.	Percent Passing Rock Size (lb)													
	1000[1/]	600[1/]	400[1/]	300	170	150[1/]	90	50[1/]	40	12	10	6	3	1
RR 3								100			50±20			8±8
RR 4						100			50±20					8±8
RR 5			100				50±20						8±8	
RR 6		100			50±20							8±8		
RR 7	100			50±20						8±8				

1/ Five percent by weight may be oversize. Each oversize piece shall not exceed the maximum size of the gradation by more than 20 percent.

(2) Stone for Rockfill. The material may be shot rock, primary crusher run, or other specified gradations approved by the Department."

SUBGRADE PREPARATION (BDE)

Effective: November 1, 2002

Revise the tenth paragraph of Article 301.03 of the Standard Specifications to read:

"Equipment of such weight, or used in such a way as to cause a rut in the finished subgrade of 13 mm (1/2 in.) or more in depth, shall be removed from the work or the rutting otherwise prevented."

SUPERPAVE BITUMINOUS CONCRETE MIXTURES (BDE)

Effective: January 1, 2000 Revised: January 1, 2004

Description. This work shall consist of designing, producing and constructing Superpave bituminous concrete mixtures using Illinois Modified Strategic Highway Research Program (SHRP) Superpave criteria. This work shall be according to Sections 406 and 407 of the Standard Specifications and the special provision, "Quality Control/Quality Assurance of Bituminous Concrete Mixtures", except as follows.

Materials.

(a) Fine Aggregate Blend Requirement. The Contractor may be required to provide FA 20 manufactured sand to meet the design requirements. For mixtures with Ndesign $\geq$ 90, at least 50 percent of the required fine aggregate fraction shall consist of either stone sand, slag sand, or steel slag sand meeting the FA/FM 20 gradation.

(b) Reclaimed Asphalt Pavement (RAP). If the Contractor is allowed to use more than 15 percent RAP, as specified in the plans, a softer performance-graded binder may be required as determined by the Engineer.

RAP shall meet the requirements of the special provision, "RAP for Use in Bituminous Concrete Mixtures".

RAP will not be permitted in mixtures containing polymer modifiers.

RAP containing steel slag will be permitted for use in top-lift surface mixtures only.

(c) Bituminous Material. The asphalt cement (AC) shall be performance-graded (PG) or polymer modified performance-graded (SBS-PG or SBR-PG) meeting the requirements of Article 1009.05 of the Standard Specifications for the grade specified on the plans.

The following additional guidelines shall be used if a polymer modified asphalt is specified:

(1) The polymer modified asphalt cement shall be shipped, maintained, and stored at the mix plant according to the manufacturer's requirements. Polymer modified asphalt cement shall be placed in an empty tank and shall not be blended with other asphalt cements.

(2) The mixture shall be designed using a mixing temperature of 163 ± 3 °C (325 ± 5 °F) and a gyratory compaction temperature of 152 ± 3 °C (305 ± 5 °F).

(3) Pneumatic-tired rollers will not be allowed unless otherwise specified by the Engineer. A vibratory roller meeting the requirements of Article 406.16 of the Standard Specifications shall be required in the absence of the pneumatic-tired roller.

(4) A manufacturer's representative from the polymer asphalt cement producer shall be present during each polymer mixture start-up and shall be available at all times during production and lay-down of the mix.

Laboratory Equipment.

(a) Superpave Gyratory Compactor. The superpave gyratory compactor (SGC) shall be used for all QC/QA testing.

(b) Ignition Oven. The ignition oven shall be used to determine the AC content. The ignition oven shall also be used to recover aggregates for all required washed gradations.

The Engineer may waive the ignition oven requirement for AC content if the aggregates to be used are known to have ignition AC content calibration factors which exceed 1.5 percent. If the ignition oven requirement is waived, other Department approved methods shall be used to determine the AC content.

Mixture Design. The Contractor shall submit mix designs, for approval, for each required mixture. Mix designs shall be developed by Level III personnel who have successfully completed the course, “Superpave Mix Design Upgrade”. Articles 406.10 and 406.13 of the Standard Specifications shall not apply. The mixtures shall be designed according to the respective Illinois Modified AASHTO references listed below.

AASHTO MP 2	Standard Specification for Superpave Volumetric Mix Design
AASHTO PP 2	Standard Practice for Short and Long Term Aging of Hot Mix Asphalt (HMA)
AASHTO PP 19	Standard Practice for Volumetric Analysis of Compacted Hot Mix Asphalt (HMA)
AASHTO PP 28	Standard Practice for Designing Superpave HMA

AASHTO T 209 Theoretical Maximum Specific Gravity and Density of Bituminous Paving Mixtures

AASHTO T 312 Preparing and Determining the Density of Hot Mix Asphalt (HMA) Specimens by Means of the Superpave Gyratory Compactor

AASHTO T 308 Determining the Asphalt Content of Hot Mix Asphalt (HMA) by the Ignition Method

(a) Mixture Composition. The ingredients of the bituminous mixture shall be combined in such proportions as to produce a mixture conforming to the composition limits by weight. The gradation mixture specified on the plans shall produce a mixture falling within the limits specified in Table 1.

TABLE 1. MIXTURE COMPOSITION (% PASSING)[1/]

Sieve Size	IL-25.0 mm		IL-19.0 mm		IL-12.5 mm[4/]		IL-9.5 mm[4/]	
	min	max	min	max	min	max	min	max
37.5 mm (1 1/2 in.)		100						
25 mm (1 in.)	90	100		100				
19 mm (3/4 in.)		90	82	100		100		
12.5 mm (1/2 in.)	45	75	50	85	90	100		100
9.5 mm (3/8 in.)						90	90	100
4.75 mm (#4)	24	42[2/]	24	50[2/]	24	65	24	65
2.36 mm (#8)	16	31	16	36	16	48[3/]	16	48[3/]
1.18 mm (#16)	10	22	10	25	10	32	10	32
600 μm (#30)								
300 μm (#50)	4	12	4	12	4	15	4	15
150 μm (#100)	3	9	3	9	3	10	3	10
75 μm (#200)	3	6	3	6	4	6	4	6

1/ Based on percent of total aggregate weight.

2/ The mixture composition shall not exceed 40 percent passing the 4.75 mm (#4) sieve for binder courses with Ndesign ≥ 90.

3/ The mixture composition shall not exceed 40 percent passing the 2.36 mm (#8) sieve for surface courses with Ndesign ≥ 90.

4/ The mixture composition for surface courses shall be according to IL-12.5 mm or IL-9.5 mm, unless otherwise specified by the Engineer.

One of the above gradations shall be used for leveling binder as specified in the plans and according to Article 406.04 of the Standard Specifications.

It is recommended that the selected combined aggregate gradation not pass through the restricted zones specified in Illinois Modified AASHTO MP 2.

(b) Dust/AC Ratio for Superpave. The ratio of material passing the 75 μm (#200) sieve to total asphalt cement shall not exceed 1.0 for mixture design (based on total weight of mixture).

(c) Volumetric Requirements. The target value for the air voids of the hot mix asphalt (HMA) shall be 4.0 percent at the design number of gyrations. The VMA and VFA of the HMA design shall be based on the nominal maximum size of the aggregate in the mix and shall conform to the requirements listed in Table 2.

TABLE 2. VOLUMETRIC REQUIREMENTS

	Voids in the Mineral Aggregate (VMA), % minimum				**Voids Filled with Asphalt (VFA), %**
Ndesign	**IL-25.0**	**IL-19.0**	**IL-12.5**	**IL-9.5**	
50	12.0	13.0	14.0	15	65 - 78
70					65 - 75
90					
105					

(d) Determination of Need for Anti-Stripping Additive. The mixture designer shall determine if an additive is needed in the mix to prevent stripping. The determination will be made on the basis of tests performed according to Illinois Modified T 283 using 4 in. Marshall bricks. To be considered acceptable by the Department as a mixture not susceptible to stripping, the ratio of conditioned to unconditioned split tensile strengths (TSRs) shall be equal to or greater than 0.75. Mixtures, either with or without an additive, with TSRs less than 0.75 will be considered unacceptable.

If it is determined that an additive is required, the additive may be hydrated lime, slaked quicklime, or a liquid additive, at the Contractor's option. The liquid additive shall be selected from the Department's list of approved additives and may be limited to those which have exhibited satisfactory performance in similar mixes.

Dry hydrated lime shall be added at a rate of 1.0 to 1.5 percent by weight of total dry aggregate. Slurry shall be added in such quantity as to provide the required amount of hydrated lime solids by weight of total dry aggregate. The exact rate of application for all

anti-stripping additives will be determined by the Department. The method of application shall be according to Article 406.12 of the Standard Specifications.

Personnel. The QC Manager and Level I Technician shall have successfully completed the Department's "Superpave Field Control Course".

Required Plant Tests. Testing shall be conducted to control the production of the bituminous mixture. The Contractor shall use the test methods identified to perform the following mixture tests at a frequency not less than that indicated in Table 3.

TABLE 3. REQUIRED PLANT TESTS for SUPERPAVE

Parameter		Frequency of Tests	Test Method
Asphalt Content by Ignition Oven		1 per half day of production	Illinois Modified AASHTO T 308
Air Voids	Bulk Specific Gravity of Gyratory Sample	1 per half day of production for first 2 days and 1 per day thereafter (first sample of the day)	Illinois Modified AASHTO T 312
	Maximum Specific Gravity of Mixture		Illinois Modified AASHTO T 209

During production, the ratio of minus 75 µm (#200) sieve material to total asphalt cement shall be not less than 0.6 nor more than 1.2 and the moisture content of the mixture at discharge from the mixer shall not exceed 0.5 percent. If at any time the ratio of minus 75 µm (#200) material to asphalt or moisture content of the mixture falls outside the stated limits, production of the mix shall cease. The cause shall be determined and corrective action satisfactory to the Engineer shall be initiated prior to resuming production.

During production, mixtures containing an anti-stripping additive will be tested by the Department for stripping according to Illinois Modified T 283. If the mixture fails to meet the TSR criteria for acceptance, no further mixture will be accepted until the Contractor takes such action as is necessary to furnish a mixture meeting the criteria.

Construction Requirements

Lift Thickness.

(a) Binder and Surface Courses. The minimum compacted lift thickness for constructing bituminous concrete binder and surface courses shall be according to Table 4:

TABLE 4 – MINIMUM COMPACTED LIFT THICKNESS

Mixture	Thickness, mm (in.)
IL-9.5	32 (1 1/4)
IL-12.5	38 (1 1/2)
IL-19.0	57 (2 1/4)
IL-25.0	76 (3)

(b) Leveling Binder. Mixtures used for leveling binder shall be as follows:

TABLE 5 – LEVELING BINDER	
Nominal, Compacted, Leveling Binder Thickness, mm (in.)	Mixture
≤ 32 (1 1/4)	IL-9.5
32 (1 1/4) to 50 (2)	IL 9.5 or IL-12.5

Density requirements shall apply for leveling binder when the nominal, compacted thickness is 32 mm (1 1/4 in.) or greater for IL-9.5 mixtures and 38 mm (1 1/2 in.) or greater for IL-12.5 mixtures.

(c) Full-Depth Pavement. The compacted thickness of the initial lift of binder course shall be 100 mm (4 in.). The compacted thickness of succeeding lifts shall meet the minimums specified in Table 4 but not exceed 100 mm (4 in.).

If a vibratory roller is used for breakdown, the compacted thickness of the binder lifts, excluding the top lift, may be increased to 150 mm (6 in.) provided the required density is obtained.

(d) Bituminous Patching. The minimum compacted lift thickness for constructing bituminous patches shall be according to Table 4.

Control Charts/Limits. Control charts/limits shall be according to QC/QA Class I requirements, except density shall be plotted on the control charts within the following control limits:

TABLE 6. DENSITY CONTROL LIMITS	
Parameter	**Individual Test**
Ndesign ≥ 90	92.0 - 96.0%
Ndesign < 90	93 - 97%

Basis of Payment. On resurfacing projects, this work will be paid for at the contract unit price per metric ton (ton) for BITUMINOUS CONCRETE SURFACE COURSE, SUPERPAVE, of the friction aggregate mixture and Ndesign specified, LEVELING BINDER (HAND METHOD), SUPERPAVE, of the Ndesign specified, LEVELING BINDER (MACHINE METHOD), SUPERPAVE, of the Ndesign specified, and BITUMINOUS CONCRETE BINDER COURSE, SUPERPAVE, of the mixture composition and Ndesign specified.

On resurfacing projects in which polymer modifiers are required, this work will be paid for at the contract unit price per metric ton (ton) for POLYMERIZED BITUMINOUS CONCRETE SURFACE COURSE, SUPERPAVE, of the friction aggregate mixture and Ndesign specified, POLYMERIZED LEVELING BINDER (HAND METHOD), SUPERPAVE, of the Ndesign specified, POLYMERIZED LEVELING BINDER (MACHINE METHOD), SUPERPAVE, of the Ndesign specified, and POLYMERIZED BITUMINOUS CONCRETE BINDER COURSE, SUPERPAVE, of the mixture composition and Ndesign specified.

On full-depth pavement projects, this work will be paid for at the contract unit price per square meter (square yard) for BITUMINOUS CONCRETE PAVEMENT, (FULL-DEPTH), SUPERPAVE, of the thickness specified.

On projects where widening is constructed and the entire pavement is then resurfaced, the binder for the widening will be paid for at the contract unit price per square meter (square yard) for BITUMINOUS CONCRETE BINDER COURSE, SUPERPAVE, of the mixture composition, Ndesign, and thickness specified. The surface and binder used to resurface the entire pavement will be paid for according to the paragraphs above for resurfacing projects.

SURFACE TESTING OF PAVEMENTS (BDE)

Effective: April 1, 2002 Revised: August 1, 2003

Bituminous Concrete Overlays

Revise Article 406.03(k) of the Standard Specifications to read:

"(k) Pavement Surface Test Equipment .....1101.10"

Revise Article 406.21 of the Standard Specifications to read:

"**406.21 Surface Tests.** The finished surface of the pavement shall be tested for smoothness within 24 hours and before the pavement is opened to traffic. All objects and debris shall be removed from the pavement surface prior to testing. Testing shall be performed in the presence of the Engineer.

(a) Test Sections/Equipment.

(1) High-Speed Mainline Pavement. High-speed mainline pavement shall consist of pavements, ramps and loops with a posted speed greater than 75 km/hr (45 mph). These sections shall be tested using a California Profilograph or an approved equivalent.

(2) Low-Speed Mainline Pavement. Low-speed mainline pavement shall consist of pavements, ramps and loops with a posted speed of 75 km/hr (45 mph) or less. These sections shall be tested using a California Profilograph or an approved equivalent.

(3) Miscellaneous Pavement. Miscellaneous pavement shall consist of:

a. pavement on horizontal curves with a centerline radius of curvature of less than or equal to 300 m (1000 ft) and pavement within the superelevation transition of such curves;

b. the first or last 4.5 m (15 ft) of a pavement section where the Contractor is not responsible for the adjoining surface;

c. intersections;

d. variable width pavements;

e. side street returns;

f. crossovers;

g. connector pavement from mainline pavement expansion joint to the bridge approach pavement;

h. bridge approach pavement; and

i. other miscellaneous pavement surfaces (i.e. a turn lane) as determined by the Engineer.

Miscellaneous pavement shall be tested using a 5 m (16 ft) straightedge set to a 10 mm (3/8 in.) tolerance.

(b) Lots/Sublots. Mainline pavement test sections will be divided into lots and sublots.

(1) Lots. A lot will be defined as a continuous strip of pavement 1600 m (1 mile) long and one lane wide. When the length of a continuous strip of pavement is less than 1600 m (1 mile), that pavement will be included in an adjacent lot. Structures will be omitted when measuring pavement length.

(2) Sublots. Lots will be divided into 160 m (0.1 mile) sublots. A partial sublot resulting from an interruption in the pavement will be subject to the same evaluation as a whole sublot.

(c) Testing Procedure. One wheel track shall be tested per lane. Testing shall be performed 1 m (3 ft) from and parallel to the edge of the lane away from traffic. A guide shall be used to maintain the proper distance.

The profile trace generated shall have stationing indicated every 150 m (500 ft) at a minimum. Both ends of the profile trace shall be labeled with the following information: contract number, beginning and ending stationing, which direction is up on the trace, which direction the profilograph was pushed, and the profilograph operator name(s). The top portion of the Department supplied form, “Profilograph Report of Pavement Smoothness” shall be completed and secured around the trace roll.

Although surface testing of intermediate lifts will not be required, they may be performed at the Contractor’s option. When this option is chosen, the testing shall be performed and the profile traces shall be generated as described above.

The Engineer may perform his/her own testing at any time for monitoring and comparison purposes.

(d) Trace Reduction and Bump Locating Procedure. All traces shall be reduced. Traces produced by a mechanical recorder shall be reduced using an electronic scanner and computer software. This software shall calculate the profile index of each sublot in mm/km (in./mile) and indicate any high points (bumps) in excess of 8 mm (0.30 in.) with a line intersecting the profile on the printout. Computerized recorders shall provide the same information.

The profile index of each track, average profile index of each sublot, average profile index of the lot and locations of bumps shall be recorded on the form.

All traces and reports shall be provided to the Engineer for the project file.

The Engineer will use the results of the testing to evaluate paving methods and equipment. If the average profile index of a lot exceeds 635 mm/km (40.0 in./mile) for high-speed mainline pavement or 1025 mm/km (65.0 in./mile) for low-speed mainline pavement, the paving operation will be suspended until corrective action is taken by the Contractor.

(e) Corrective Work. All bumps in excess of 8 mm (0.30 in.) in a length of 8 m (25 ft) or less shall be corrected. If the bump is greater than 13 mm (0.50 in.), the pavement shall be removed and replaced to the satisfaction of the Engineer at the Contractor's expense. The minimum length of pavement to be removed shall be 900 mm (3 ft).

(1) High-Speed Mainline Pavement. Any sublot having a profile index within the range of, greater than 475 (30.0) to 635 (40.0) mm/km (in./mile) including bumps, shall be corrected to reduce the profile index to 475 mm/km (30.0 in./mile) or less on each trace. Any sublot having a profile index greater than 635 mm/km (40.0 in./mile) including bumps, shall be corrected to reduce the profile index to 475 mm/km (30.0 in./mile) or less on each trace, or replaced at the Contractor's option.

(2) Low-Speed Mainline Pavement. Any sublot having a profile index within the range of, greater than 710 (45.0) to 1025 (65.0) mm/km (in./mile) including bumps, shall be corrected to reduce the profile index to 710 mm/km (45.0 in./mile) or less on each trace. Any sublot having a profile index greater than 1025 mm/km (65.0 in./mile) including bumps, shall be corrected to reduce the profile index to 710 mm/km (45.0 in./mile) or less on each trace, or replaced at the Contractor's option.

(3) Miscellaneous Pavement. Surface variations which exceed the 10 mm (3/8 in.) tolerance will be marked by the Engineer and shall be corrected by the Contractor.

Corrective work shall be completed using either an approved grinding device consisting of multiple saws or by removing and replacing the pavement. Corrective work shall be applied to the full lane width. When completed, the corrected area shall have uniform texture and appearance, with the beginning and ending of the corrected area squared normal to the centerline of the paved surface.

Upon completion of the corrective work, the surface of the sublot(s) shall be retested. The Contractor shall furnish the profilograph tracing(s) and the completed form(s) to the Engineer within two working days after corrections are made. If the profile index and/or bumps still do not meet the requirements, additional corrective work shall be performed.

Corrective work shall be at the Contractor's expense.

(f) Smoothness Assessments. Assessments will be paid to or deducted from the Contractor for each sublot of mainline pavement, per the Smoothness Assessment Schedule. Assessments will be based on the average profile index of each sublot prior to performing any corrective work unless the Contractor has chosen to remove and replace the sublot. For sublots that are replaced, assessments will be based on the profile index determined after replacement.

Assessments will not be paid or deducted until all other contract requirements for the pavement are satisfied. Pavement that is corrected or replaced for reasons other than smoothness, shall be retested as stated herein.

SMOOTHNESS ASSESSMENT SCHEDULE (Bituminous Concrete Overlays)		
High-Speed Mainline Pavement Average Profile Index mm/km (in./mile)	Low-Speed Mainline Pavement Average Profile Index mm/km (in./mile)	Assessment per sublot
95 (6.0) or less		+$300.00
>95 (6.0) to 160 (10.0)	240 (15.0) or less	+$250.00
>160 (10.0) to 240 (15.0)		+$200.00
	>240 (15.0) to 400 (25.0)	+$150.00
>240 (15.0) to 285 (18.0)		+$100.00
>285 (18.0) to 475 (30.0)	>400 (25.0) to 710 (45.0)	+$0.00
>475 (30.0) to 635 (40.0)	>710 (45.0) to 1025 (65.0)	+$0.00
Greater than 635 (40.0)	Greater than 1025 (65.0)	-$300.00

Smoothness assessments will not be applied to miscellaneous pavement sections."

Bituminous Concrete Pavement (Full-Depth)

Revise Article 407.09 of the Standard Specifications to read:

"**407.09 Surface Tests.** The finished surface of the pavement shall be tested for smoothness according to Article 406.21 except as follows:

Two wheel tracks shall be tested per lane. Testing shall be performed 1 m (3 ft) from and parallel to each lane edge."

SMOOTHNESS ASSESSMENT SCHEDULE (Full-Depth Bituminous)		
High-Speed Mainline Pavement Average Profile Index mm/km (in./mile)	Low-Speed Mainline Pavement Average Profile Index mm/km (in./mile)	Assessment per sublot
95 (6.0) or less		+$800.00
>95 (6.0) to 160 (10.0)	240 (15.0) or less	+$650.00
>160 (10.0) to 240 (15.0)		+$500.00
	>240 (15.0) to 400 (25.0)	+$350.00
>240 (15.0) to 285 (18.0)		+$250.00
>285 (18.0) to 475 (30.0)	>400 (25.0) to 710 (45.0)	+$0.00
>475 (30.0) to 635 (40.0)	>710 (45.0) to 1025 (65.0)	+$0.00
Greater than 635 (40.0)	Greater than 1025 (65.0)	-$500.00

Delete the fourth paragraph of Article 407.13 of the Standard Specifications.

Portland Cement Concrete Pavement

Revise Article 420.12 of the Standard Specifications to read:

"**420.12 Surface Tests.** The finished surface of the pavement shall be tested for smoothness according to Article 406.21 except as follows:

Two wheel tracks shall be tested per lane. Testing shall be performed 1 m (3 ft) from and parallel to each lane edge.

Membrane curing damaged during testing shall be repaired as directed by the Engineer at the Contractor's expense.

No further texturing for skid resistance will be required for areas corrected by grinding. Protective coat shall be reapplied to ground areas according to Article 420.21 at the Contractor's expense."

For pavement that is corrected by removal and replacement, the minimum length to be removed shall meet the requirements of either Class A or Class B patching.

SMOOTHNESS ASSESSMENT SCHEDULE (PCC)		
High-Speed Mainline Pavement Average Profile Index mm/km (in./mile)	Low-Speed Mainline Pavement Average Profile Index mm/km (in./mile)	Assessment per sublot
95 (6.0) or less		+$1200.00
>95 (6.0) to 160 (10.0)	240 (15.0) or less	+$1000.00
>160 (10.0) to 240 (15.0)		+$750.00
	>240 (15.0) to 400 (25.0)	+$500.00
>240 (15.0) to 285 (18.0)		+$370.00
>285 (18.0) to 475 (30.0)	>400 (25.0) to 710 (45.0)	+$0.00
>475 (30.0) to 635 (40.0)	>710 (45.0) to 1025 (65.0)	+$0.00
Greater than 635 (40.0)	Greater than 1025 (65.0)	-$750.00

Delete the sixth paragraph of Article 420.23 of the Standard Specifications.

Testing Equipment

Revise Article 1101.10 of the Standard Specifications to read:

"**1101.10 Pavement Surface Test Equipment.** Required surface testing and analysis equipment and their jobsite transportation shall be provided by the Contractor.

(a) 5 m (16 ft) Straightedge. The 5 m (16 ft) straightedge shall consist of a metal I-beam mounted between two wheels spaced 5 m (16 ft) between the axles. Scratcher bolts which can be easily and accurately adjusted, shall be set at the 1/4, 1/2, and 3/4 points between the axles. A handle suitable for pushing and guiding shall be attached to the straightedge. The straightedge shall meet the approval of the Engineer.

(b) California Profilograph. The California Profilograph or approved equivalent shall consist of a frame 8 m (25 ft) in length supported upon multiple wheels at either end. The profile shall be recorded from the vertical movement of a wheel attached to the frame at mid point. All traces from pavement sections tested with a California Profilograph or approved equivalent shall be recorded on paper with scales of 300:1 longitudinally and 1:1 vertically. Data filters for an automated California Profilograph shall be set according to the parameters outlined in California Test 526, except the blanking band shall be set to 0.0 mm (0.00 in.).

(1) Calibration. The Contractor shall demonstrate to the Engineer that the testing equipment has proper tire pressure inflation, trueness of tire travel, and is calibrated for vertical displacement and horizontal distance. This calibration shall consist of the following:

a. A 150 to 300 m (500 to 1000 ft) long calibration test section shall be located on the project. This test section should be relatively straight and flat. The profilograph shall be calibrated for longitudinal distance on this test section to the satisfaction of the Engineer.

b. Longitudinal calibration consists of pushing, at walking speed (approximately 5 km/hr (3 mph)), the profilograph over the pre-measured test section and determining the chart scale factor. To calculate the chart scale factor, divide the pre-measured test distance, in millimeters (inches), by the length of the profile trace from this test section, in millimeters (inches). This factor should be 300 ± 0.5. If the profilograph produces charts with a different scale factor, adjustment of the profilograph shall be made to bring the scale factor to the tolerance specified above.

c. Vertical calibration consists of placing the center recording wheel of the profilograph on a base plate and recording the base elevation. Two plates, 13 mm (0.5 in.) thick each, are added under the center wheel, one at a time, and the change in elevation noted. The two plates are removed, one at a time, and the change in elevation noted. Each step in the process shall show a change in height of 13 mm ± 1.0 mm (0.5 ± 0.01 in.). If the profilograph produces results not conforming to the above limits, it shall be adjusted to the tolerance specified.

d. The automatic trace reduction capability of a machine so equipped shall be checked by comparing the machine's results to the results obtained through manual trace reduction using California Test 526 with a 0.0 mm (0.00 in.) blanking band. The comparison shall be made with the trace obtained on the pre-measured test section. The results of the comparison shall not differ by more than 30 mm/km (2.0 in./mile).

e. All calibration traces and calculations shall be submitted to the Engineer for the project file.

The Engineer may retest the pavement at any time to verify the accuracy of the equipment.

(2) Trace Analysis. The Contractor shall reduce/evaluate these traces using a 0.0 mm (0.00 in.) blanking band and determine a profile index in mm/km (in./mile) for each section of finished pavement surface. If the Contractor's profilograph is equipped with a computerized recorder, the trace produced will be evaluated without further reduction. If the profilograph has a mechanical recorder, the Contractor shall provide an electronic scanner, a computer, and software to reduce the trace. All analysis equipment (electronic scanner, computerized recorder, etc.) shall be able to accept 0.0 mm (0.00 in.) for the blanking band."

404 PERMIT

FAP Route 614 (IL 78)
Section 147 (RS-5, B-1, B-2)
Contract No. 92656
Morgan and Cass Counties

DEPARTMENT OF THE ARMY
ST. LOUIS DISTRICT, CORPS OF ENGINEERS
1222 SPRUCE STREET
ST. LOUIS, MISSOURI 63103-2833

June 9, 2003

RECD DIST. 6
JUN 11 2003
STUDIES & PLANS

REPLY TO
ATTENTION OF:
Regulatory Branch
File Number: 200303670

Ms. Christine M. Reed, P.E.
District Engineer
Illinois Department of Transportation
Division of Highways/District 6
126 East Ash
Springfield, Illinois 62704-4792

Dear Ms. Reed:

We have reviewed your application concerning the replacement of the structures carrying FAP Route 614 (Illinois 78) over Little Indian Creek and a Fork of Little Indian Creek north of Jacksonville near Literberry in Morgan County, Illinois (Section 147(RS-5, B-1). Both creeks are secondary tributaries to the Illinois River.

Based upon a review of the U.S. Geological Survey 7.5-minute topographical map, we determined that both tributaries would possess an ordinary high water mark at this location and would be considered a jurisdictional waters of the United States. Therefore, the placement of fill material below the ordinary high water elevation requires a permit from this office.

The Corps of Engineers has determined that this activity will have no affect on endangered species, and is authorized under Section 404 of the Clean Water Act by an existing Department of the Army nationwide permit as described in the January 15, 2002, Federal Register, Issuance of Nationwide Permits; Notice (67 FR 2080), Appendix A (B)(14). This **permit verification** is valid for two years from the date of this letter. Enclosed is a copy of the nationwide permit and conditions and management practices with which you must comply.

In accordance with General Condition number 14 of the Nationwide Permit, a compliance certification (Attachment A of this package) must be completed within 30 days of project completion or the permit issuance may be revoked and considered null and void.

The Illinois Environmental Protection Agency (IEPA) has issued Section 401 water quality certification for these permits subject to the following conditions:

Printed on Recycled Paper

a. The affected area of the stream channel shall not exceed 100 linear feet, as measured along the stream corridor.

b. Temporary run-arounds shall be constructed of clean coarse aggregate.

c. Any spoil material excavated, dredged or otherwise produced must not be returned to the waterway but must be deposited in a self-contained area in compliance with all State statutes, as determined by IEPA.

d. Any back filling must be done with clean material and placed in a manner to prevent violation of applicable water quality standards.

e. The applicant shall not cause: (1) violation of applicable water quality standards of the Illinois Pollution Control Board, Title 35, Subtitle C: Water Pollution Rules and Regulations; (2) water pollution as defined and prohibited by the Illinois Environmental Protection Act; or (3) interference with water use practices near public recreation areas or water supply intakes.

f. All areas affected by construction shall be mulched and seeded as soon after construction as possible. The applicant shall undertake necessary measures and procedures to reduce erosion during construction. Interim measures to prevent erosion during construction shall be taken and may include the installation of staked straw bales, sedimentation basins and temporary mulching. All construction within the waterway shall be conducted during zero or low flow conditions. The applicant shall be responsible for obtaining an NPDES Storm Water Permit prior to initiating construction if the construction activity associated with the project will result in the disturbance of five (5) or more acres, total land area. An NPDES Storm Water Permit may be obtained by submitting a properly completed Notice of Intent (NOI) form by certified mail to the Illinois EPA, Division of Water Pollution Control, Permit Section.

g. That applicant shall implement erosion control measures consistent with the "Illinois Urban Manual" (IEPA/USDA, NRCS; 1995).

This determination is applicable only to the permit program administered by the Corps of Engineers. It does not eliminate the need to obtain other Federal, state or local approvals before beginning work.

You are reminded that the **permit** is based on submitted plans. Variations from these plans shall constitute a violation of Federal law and may result in the revocation of the permit. If this nationwide permit is modified, reissued, or revoked during this period, the provisions described at 33 CFR 330.6(b) will apply.

This **jurisdictional determination** is considered a **preliminary jurisdictional determination** in accordance with final regulations published on March 28, 2000 (65 FR 16485-16503). Enclosed is a *Notification of Administrative Appeal Options and Process and Request for Appeal* for your consideration and use. This determination cannot be appealed. The **jurisdictional determination** is valid for a period of five years from the date of this letter unless new information warrants revision of this determination before the expiration date.

If you have any questions, concerning this matter, please contact me at (314) 331-8582. Please refer to file number 200303670.

Sincerely,

Keith A. McMullen

Keith A. McMullen
Assistant Branch Chief
Regulatory Branch

Enclosure

Copy Furnished: w/o enclosure

Dalton, IDNR
Allison, IEPA

ATTACHMENT A

COMPLETED WORK CERTIFICATION

Date of Issuance: June 9, 2003

File Number: 200303670

Name of Permittee: IDOT/District 6

River Basin/County/State: Illinois River/Morgan County/IL

Upon completion of this activity authorized by this permit and any mitigation required by the permit, sign this certification and return it to the following address:

U.S. Army Corps of Engineers
Attn: Regulatory Branch (CO-F)
1222 Spruce Street
St. Louis, Missouri 63103-2833

(Please note that your permitted activity is subject to a compliance inspection by a U.S. Army Corps of Engineers representative. If you fail to comply with this permit, you are subject to permit suspension, modification or revocation.)

_____

Permittee:

I hereby certify that the work authorized by the above referenced permit has been completed in accordance with the terms and conditions of the said permit, and required mitigation was completed in accordance with the permit conditions.

_____ _____

Signature of Permittee **Date**

Nationwide Permits and Conditions

The following information presents the requirements for the nationwide Section 404/10 permits most often used on highway projects. (For information regarding the other nationwide permits, refer to BDE Information Memorandums 02-38, dated February 13, 2002 and 02-39, dated March 25, 2002.) The information in this guidance reflects the requirements associated with the reissued nationwide permits that were published in the January 15, 2002 *Federal Register* (67 FR 2019). The parenthetical references (Section 10, Section 404) following each of the nationwide permits indicate the specific authorities under which that permit is issued.

Permittees wishing to conduct activities under the nationwide permits must comply with the terms of the applicable permit and the conditions in Section C of this document.

B. Nationwide Permits

3. **Maintenance.** Activities related to:
(i) The repair, rehabilitation, or replacement of any previously authorized, currently serviceable, structure, or fill, or of any currently serviceable structure or fill authorized by 33 CFR 330.3, provided that the structure or fill is not to be put to uses differing from those uses specified or contemplated for it in the original permit or the most recently authorized modification. Minor deviations in the structure's configuration or filled area including those due to changes in materials, construction techniques, or current construction codes or safety standards which are necessary to make repair, rehabilitation, or replacement are permitted, provided the adverse environmental effects resulting from such repair, rehabilitation, or replacement are minimal. Currently serviceable means useable as is or with some maintenance, but not so degraded as to essentially require reconstruction. This NWP authorizes the repair, rehabilitation, or replacement of those structures or fills destroyed or damaged by storms, floods, fire or other discrete events, provided the repair, rehabilitation, or replacement is commenced, or is under contract to commence, within two years of the date of their destruction or damage. In cases of catastrophic events, such as hurricanes or tornadoes, this two-year limit may be waived by the District Engineer, provided the permittee can demonstrate funding, contract, or other similar delays.

(ii) Discharges of dredged or fill material, including excavation, into all waters of the US to remove accumulated sediments and debris in the vicinity of, and within, existing structures (e.g., bridges, culverted road crossings, water intake structures, etc.) and the placement of new or additional riprap to protect the structure, provided the permittee notifies the District Engineer in accordance with General Condition 13. The removal of sediment is limited to the minimum necessary to restore the waterway in the immediate vicinity of the structure to the approximate dimensions that existed when the structure was built, but cannot extend further than 200 feet in any direction from the structure. The placement of rip rap must be the minimum necessary to protect the structure or to ensure the safety of the structure. All excavated materials must be deposited and retained in an upland area unless otherwise specifically approved by the District Engineer under separate authorization. Any bank stabilization measures not directly associated with the structure will require a separate authorization from the District Engineer.

(iii) Discharges of dredged or fill material, including excavation, into all waters of the US for activities associated with the restoration of upland areas damaged by a storm, flood, or other discrete event, including the construction, placement, or installation of upland protection structures and minor dredging to remove obstructions in a water of the US. (Uplands lost as a result of a storm, flood, or other discrete event can be replaced without a Section 404 permit provided the uplands are restored to their original pre- event location. This NWP is for the activities in waters of the US associated with the replacement of the uplands.) The permittee must notify the District Engineer, in accordance with General Condition 13, within 12-months of the date of the damage and the work must commence, or be under contract to commence, within two years of the date of the damage. The permittee should provide evidence, such as a recent topographic survey or photographs, to justify the extent of the proposed restoration. The restoration of the damaged areas cannot exceed the contours, or ordinary high water mark, that existed before the damage. The District

Engineer retains the right to determine the extent of the pre-existing conditions and the extent of any restoration work authorized by this permit. Minor dredging to remove obstructions from the adjacent waterbody is limited to 50 cubic yards below the plane of the ordinary high water mark, and is limited to the amount necessary to restore the pre-existing bottom contours of the waterbody. The dredging may not be done primarily to obtain fill for any restoration activities. The discharge of dredged or fill material and all related work needed to restore the upland must be part of a single and complete project. This permit cannot be used in conjunction with NWP 18 or NWP 19 to restore damaged upland areas. This permit cannot be used to reclaim historic lands lost, over an extended period, to normal erosion processes. This permit does not authorize maintenance dredging for the primary purpose of navigation and beach restoration. This permit does not authorize new stream channelization or stream relocation projects. Any work authorized by this permit must not cause more than minimal degradation of water quality, more than minimal changes to the flow characteristics of the stream, or increase flooding (See General Conditions 9 and 21). (Sections 10 and 404)

Note: This NWP authorizes the repair, rehabilitation, or replacement of any previously authorized structure or fill that does not qualify for the Section 404(f) exemption for maintenance.

13. **Bank Stabilization.** Bank stabilization activities necessary for erosion prevention provided the activity meets all of the following criteria:

a. No material is placed in excess of the minimum needed for erosion protection;
b. The bank stabilization activity is less than 500 feet in length;
c. The activity will not exceed an average of one cubic yard per running foot placed along the bank below the plane of the ordinary high water mark or the high tide line;
d. No material is placed in any special aquatic site, including wetlands;
e. No material is of the type, or is placed in any location, or in any manner, to impair surface water flow into or out of any wetland area;
f. No material is placed in a manner that will be eroded by normal or expected high flows (properly anchored trees and treetops may be used in low energy areas); and,
g. The activity is part of a single and complete project.

Bank stabilization activities in excess of 500 feet in length or greater than an average of one cubic yard per running foot may be authorized if the permittee notifies the District Engineer in accordance with the ``Notification" General Condition 13 and the District Engineer determines the activity complies with the other terms and conditions of the NWP and the adverse environmental effects are minimal both individually and cumulatively. This NWP may not be used for the channelization of waters of the US. (Sections 10 and 404)

14. **Linear Transportation Projects.** Activities required for the construction, expansion, modification, or improvement of linear transportation crossings (e.g., highways, railways, trails, airport runways, and taxiways) in waters of the US, including wetlands, if the activity meets the following criteria:

a. This NWP is subject to the following acreage limits:
(1) For linear transportation projects in non-tidal waters, provided the discharge does not cause the loss of greater than 1/2- acre of waters of the US; or
(2) For linear transportation projects in tidal waters, provided the discharge does not cause the loss of greater than 1/3-acre of waters of the US.
b. The permittee must notify the District Engineer in accordance with General Condition 13 if any of the following criteria are met:
(1) The discharge causes the loss of greater than 1/10 acre of waters of the US; or
(2) There is a discharge in a special aquatic site, including wetlands;
c. The notification must include a compensatory mitigation proposal to offset permanent losses of waters of the US to ensure that those losses result only in minimal adverse effects to the aquatic environment and a statement describing how temporary losses will be minimized to the maximum extent practicable;
d. For discharges in special aquatic sites, including wetlands, and stream riffle and pool complexes, the notification must include a delineation of the affected special aquatic sites;

e. The width of the fill is limited to the minimum necessary for the crossing;
f. This permit does not authorize stream channelization, and the authorized activities must not cause more than minimal changes to the hydraulic flow characteristics of the stream, increase flooding, or cause more than minimal degradation of water quality of any stream (see General Conditions 9 and 21);
g. This permit cannot be used to authorize non-linear features commonly associated with transportation projects, such as vehicle maintenance or storage buildings, parking lots, train stations, or aircraft hangars; and
h. The crossing is a single and complete project for crossing waters of the US. Where a road segment (i.e., the shortest segment of a road with independent utility that is part of a larger project) has multiple crossings of streams (several single and complete projects) the Corps will consider whether it should use its discretionary authority to require an Individual Permit. (Sections 10 and 404)

Note: Some discharges for the construction of farm roads, forest roads, or temporary roads for moving mining equipment may be eligible for an exemption from the need for a Section 404 permit (see 33 CFR 323.4).

23. **Approved Categorical Exclusions.** Activities undertaken, assisted, authorized, regulated, funded, or financed, in whole or in part, by another Federal agency or department where that agency or department has determined, pursuant to the Council on Environmental Quality Regulation for Implementing the Procedural Provisions of the National Environmental Policy Act (NEPA) (40 CFR part 1500 et seq.), that the activity, work, or discharge is categorically excluded from environmental documentation, because it is included within a category of actions which neither individually nor cumulatively have a significant effect on the human environment, and the Office of the Chief of Engineers (ATTN: CECW-OR) has been furnished notice of the agency's or department's application for the categorical exclusion and concurs with that determination. Before approval for purposes of this NWP of any agency's categorical exclusions, the Chief of Engineers will solicit public comment. In addressing these comments, the Chief of Engineers may require certain conditions for authorization of an agency's categorical exclusions under this NWP. (Sections 10 and 404)

33. **Temporary Construction, Access and Dewatering.** Temporary structures, work and discharges, including cofferdams, necessary for construction activities or access fills or dewatering of construction sites; provided that the associated primary activity is authorized by the Corps of Engineers or the USCG, or for other construction activities not subject to the Corps or USCG regulations. Appropriate measures must be taken to maintain near normal downstream flows and to minimize flooding. Fill must be of materials, and placed in a manner, that will not be eroded by expected high flows. The use of dredged material may be allowed if it is determined by the District Engineer that it will not cause more than minimal adverse effects on aquatic resources. Temporary fill must be entirely removed to upland areas, or dredged material returned to its original location, following completion of the construction activity, and the affected areas must be restored to the pre-project conditions. Cofferdams cannot be used to dewater wetlands or other aquatic areas to change their use. Structures left in place after cofferdams are removed require a Section 10 permit if located in navigable waters of the U.S. (See 33 CFR part 322). The permittee must notify the District Engineer in accordance with the ``Notification" General Condition. The notification must also include a restoration plan of reasonable measures to avoid and minimize adverse effects to aquatic resources. The District Engineer will add Special Conditions, where necessary, to ensure environmental adverse effects is minimal. Such conditions may include: limiting the temporary work to the minimum necessary; requiring seasonal restrictions; modifying the restoration plan; and requiring alternative construction methods (e.g. construction mats in wetlands where practicable.). (Sections 10 and 404)

C. Nationwide Permit General Conditions

The following General Conditions must be followed in order for any authorization by an NWP to be valid:

1. **Navigation.** No activity may cause more than a minimal adverse effect on navigation.

2. **Proper Maintenance.** Any structure or fill authorized shall be properly maintained, including maintenance to ensure public safety.

3. **Soil Erosion and Sediment Controls.** Appropriate soil erosion and sediment controls must be used and maintained in effective operating condition during construction, and all exposed soil and other fills, as well as any work below the ordinary high water mark or high tide line, must be permanently stabilized at the earliest practicable date. Permittees are encouraged to perform work within waters of the United States during periods of low-flow or no-flow.

4. **Aquatic Life Movements.** No activity may substantially disrupt the necessary life-cycle movements of those species of aquatic life indigenous to the waterbody, including those species that normally migrate through the area, unless the activity's primary purpose is to impound water. Culverts placed in streams must be installed to maintain low flow conditions.

5. **Equipment.** Heavy equipment working in wetlands must be placed on mats, or other measures must be taken to minimize soil disturbance

6. **Regional and Case-By-Case Conditions.** The activity must comply with any regional conditions that may have been added by the Division Engineer (see 33 CFR 330.4(e)) and with any case specific conditions added by the Corps or by the state or tribe in its Section 401 Water Quality Certification and Coastal Zone Management Act consistency determination.

7. **Wild and Scenic Rivers.** No activity may occur in a component of the National Wild and Scenic River System; or in a river officially designated by Congress as a "study river" for possible inclusion in the system, while the river is in an official study status; unless the appropriate Federal agency, with direct management responsibility for such river, has determined in writing that the proposed activity will not adversely affect the Wild and Scenic River designation, or study status. Information on Wild and Scenic Rivers may be obtained from the appropriate Federal land management agency in the area (e.g., National Park Service, U.S. Forest Service, Bureau of Land Management, U.S. Fish and Wildlife Service).

8. **Tribal Rights.** No activity or its operation may impair reserved tribal rights, including, but not limited to, reserved water rights and treaty fishing and hunting rights

9. **Water Quality.** (a) In certain states and tribal lands an individual 401 Water Quality Certification must be obtained or waived (See 33 CFR 330.4(c)).

(b) For NWPs 12, 14, 17, 18, 32, 39, 40, 42, 43, and 44, where the state or tribal 401 certification (either generically or individually) does not require or approve water quality management measures, the permittee must provide water quality management measures that will ensure that the authorized work does not result in more than minimal degradation of water quality (or the Corps determines that compliance with state or local standards, where applicable, will ensure no more than minimal adverse effect on water quality). An important component of water quality management includes stormwater management that minimizes degradation of the downstream aquatic system, including water quality (refer to General Condition 21 for stormwater management requirements). Another important component of water quality management is the establishment and maintenance of vegetated buffers next to open waters, including streams (refer to General Condition 19 for vegetated buffer requirements for the NWPs). This condition is only applicable to projects that have the potential to affect water quality. While appropriate measures must be taken, in most cases it is not necessary to conduct detailed studies identify such measures or to require monitoring.

10. **Coastal Zone Management.** In certain states, an individual state coastal zone management consistency concurrence must be obtained or waived (see 33 CFR 330.4(d)).

11. **Endangered Species.** (a) No activity is authorized under any NWP which is likely to jeopardize the continued existence of a threatened or endangered species or a species proposed for such designation, as identified under the Federal Endangered Species Act (ESA), or which will destroy or adversely modify the critical habitat of such species. Non-federal permittees shall notify the District Engineer if any listed

species or designated critical habitat might be affected or is in the vicinity of the project, or is located in the designated critical habitat and shall not begin work on the activity until notified by the District Engineer that the requirements of the ESA have been satisfied and that the activity is authorized. For activities that may affect Federally-listed endangered or threatened species or designated critical habitat, the notification must include the name(s) of the endangered or threatened species that may be affected by the proposed work or that utilize the designated critical habitat that may be affected by the proposed work. As a result of formal or informal consultation with the FWS or NMFS the District Engineer may add species-specific regional endangered species conditions to the NWPs.

(b) Authorization of an activity by a NWP does not authorize the ``take" of a threatened or endangered species as defined under the ESA. In the absence of separate authorization (e.g., an ESA Section 10 Permit, a Biological Opinion with ``incidental take" provisions, etc.) from the USFWS or the NMFS, both lethal and non-lethal ``takes" of protected species are in violation of the ESA. Information on the location of threatened and endangered species and their critical habitat can be obtained directly from the offices of the USFWS and NMFS or their world wide web pages at http://www.fws.gov/r9endspp/endspp.html and http://www.nmfs.noaa.gov/prot_res/overview/es.html respectively

12. Historic Properties. No activity which may affect historic properties listed, or eligible for listing, in the National Register of Historic Places is authorized, until the District Engineer has complied with the provisions of 33 CFR part 325, Appendix C. The prospective permittee must notify the District Engineer if the authorized activity may affect any historic properties listed, determined to be eligible, or which the prospective permittee has reason to believe may be eligible for listing on the National Register of Historic Places, and shall not begin the activity until notified by the District Engineer that the requirements of the National Historic Preservation Act have been satisfied and that the activity is authorized. Information on the location and existence of historic resources can be obtained from the State Historic Preservation Office and the National Register of Historic Places (see 33 CFR 330.4(g)). For activities that may affect historic properties listed in, or eligible for listing in, the National Register of Historic Places, the notification must state which historic property may be affected by the proposed work or include a vicinity map indicating the location of the historic property.

13. Notification. (a) Timing; where required by the terms of the NWP, the prospective permittee must notify the District Engineer with a preconstruction notification (PCN) as early as possible. The District Engineer must determine if the notification is complete within 30 days of the date of receipt and can request additional information necessary to make the PCN complete only once. However, if the prospective permittee does not provide all of the requested information, then the District Engineer will notify the prospective permittee that the notification is still incomplete and the PCN review process will not commence until all of the requested information has been received by the District Engineer. The prospective permittee shall not begin the activity:

(1) Until notified in writing by the District Engineer that the activity may proceed under the NWP with any special conditions imposed by the District or Division Engineer; or
(2) If notified in writing by the District or Division Engineer that an Individual Permit is required; or
(3) Unless 45 days have passed from the District Engineer's receipt of the complete notification and the prospective permittee has not received written notice from the District or Division Engineer. Subsequently, the permittee's right to proceed under the NWP may be modified, suspended, or revoked only in accordance with the procedure set forth in 33 CFR 330.5(d)(2).

(b) Contents of Notification: The notification must be in writing and include the following information:

(1) Name, address and telephone numbers of the prospective permittee;
(2) Location of the proposed project;
(3) Brief description of the proposed project; the project's purpose; direct and indirect adverse environmental effects the project would cause; any other NWP(s), Regional General Permit(s), or Individual Permit(s) used or intended to be used to authorize any part of the proposed project or any related activity. Sketches should be provided when necessary to show that the activity complies with the terms of the NWP (Sketches usually clarify the project and when provided result in a quicker decision.);
(4) For NWPs 7, 12, 14, 18, 21, 34, 38, 39, 40, 41, 42, and 43, the PCN must also include a delineation of affected special aquatic sites, including wetlands, vegetated shallows (e.g., submerged aquatic vegetation, seagrass beds), and riffle and pool complexes (see paragraph 13(f));

(5) For NWP 7 (Outfall Structures and Maintenance), the PCN must include information regarding the original design capacities and configurations of those areas of the facility where maintenance dredging or excavation is proposed;

(6) For NWP 14 (Linear Transportation Projects), the PCN must include a compensatory mitigation proposal to offset permanent losses of waters of the US and a statement describing how temporary losses of waters of the US will be minimized to the maximum extent practicable;

(7) For NWP 21 (Surface Coal Mining Activities), the PCN must include an Office of Surface Mining (OSM) or state-approved mitigation plan, if applicable. To be authorized by this NWP, the District Engineer must determine that the activity complies with the terms and conditions of the NWP and that the adverse environmental effects are minimal both individually and cumulatively and must notify the project sponsor of this determination in writing;

(8) For NWP 27 (Stream and Wetland Restoration Activities), the PCN must include documentation of the prior condition of the site that will be reverted by the permittee;

(9) For NWP 29 (Single-Family Housing), the PCN must also include:

(i) Any past use of this NWP by the Individual Permittee and/or the permittee's spouse;

(ii) A statement that the single-family housing activity is for a personal residence of the permittee;

(iii) A description of the entire parcel, including its size, and a delineation of wetlands. For the purpose of this NWP, parcels of land measuring 1/4-acre or less will not require a formal on-site delineation. However, the applicant shall provide an indication of where the wetlands are and the amount of wetlands that exists on the property. For parcels greater than 1/4-acre in size, formal wetland delineation must be prepared in accordance with the current method required by the Corps. (See paragraph 13(f));

(iv) A written description of all land (including, if available, legal descriptions) owned by the prospective permittee and/or the prospective permittee's spouse, within a one mile radius of the parcel, in any form of ownership (including any land owned as a partner, corporation, joint tenant, co-tenant, or as a tenant-by-the-entirety) and any land on which a purchase and sale agreement or other contract for sale or purchase has been executed;

(10) For NWP 31 (Maintenance of Existing Flood Control Facilities), the prospective permittee must either notify the District Engineer with a PCN prior to each maintenance activity or submit a five year (or less) maintenance plan. In addition, the PCN must include all of the following:

(i) Sufficient baseline information identifying the approved channel depths and configurations and existing facilities. Minor deviations are authorized, provided the approved flood control protection or drainage is not increased;

(ii) A delineation of any affected special aquatic sites, including wetlands; and,

(iii) Location of the dredged material disposal site;

(11) For NWP 33 (Temporary Construction, Access, and Dewatering), the PCN must also include a restoration plan of reasonable measures to avoid and minimize adverse effects to aquatic resources;

(12) For NWPs 39, 43 and 44, the PCN must also include a written statement to the District Engineer explaining how avoidance and minimization for losses of waters of the US were achieved on the project site;

(13) For NWP 39 and NWP 42, the PCN must include a compensatory mitigation proposal to offset losses of waters of the US or justification explaining why compensatory mitigation should not be required. For discharges that cause the loss of greater than 300 linear feet of an intermittent stream bed, to be authorized, the District Engineer must determine that the activity complies with the other terms and conditions of the NWP, determine adverse environmental effects are minimal both individually and cumulatively, and waive the limitation on stream impacts in writing before the permittee may proceed;

(14) For NWP 40 (Agricultural Activities), the PCN must include a compensatory mitigation proposal to offset losses of waters of the US. This NWP does not authorize the relocation of greater than 300 linear- feet of existing serviceable drainage ditches constructed in non-tidal streams unless, for drainage ditches constructed in intermittent non- tidal streams, the District Engineer waives this criterion in writing, and the District Engineer has determined that the project complies with all terms and conditions of this NWP, and that any adverse impacts of the project on the aquatic environment are minimal, both individually and cumulatively;

(15) For NWP 43 (Stormwater Management Facilities), the PCN must include, for the construction of new stormwater management facilities, a maintenance plan (in accordance with state and local requirements, if applicable) and a compensatory mitigation proposal to offset losses of waters of the US. For discharges that cause the loss of greater than 300 linear feet of an intermittent stream bed, to

be authorized, the District Engineer must determine that the activity complies with the other terms and conditions of the NWP, determine adverse environmental effects are minimal both individually and cumulatively, and waive the limitation on stream impacts in writing before the permittee may proceed;

(16) For NWP 44 (Mining Activities), the PCN must include a description of all waters of the US adversely affected by the project, a description of measures taken to minimize adverse effects to waters of the US, a description of measures taken to comply with the criteria of the NWP, and a reclamation plan (for all aggregate mining activities in isolated waters and non-tidal wetlands adjacent to headwaters and any hard rock/mineral mining activities);

(17) For activities that may adversely affect Federally-listed endangered or threatened species, the PCN must include the name(s) of those endangered or threatened species that may be affected by the proposed work or utilize the designated critical habitat that may be affected by the proposed work; and

(18) For activities that may affect historic properties listed in, or eligible for listing in, the National Register of Historic Places, the PCN must state which historic property may be affected by the proposed work or include a vicinity map indicating the location of the historic property.

(c) Form of Notification: The standard Individual Permit application form (Form ENG 4345) may be used as the notification but must clearly indicate that it is a PCN and must include all of the information required in (b) (1)-(18) of General Condition 13. A letter containing the requisite information may also be used.

(d) District Engineer's Decision: In reviewing the PCN for the proposed activity, the District Engineer will determine whether the activity authorized by the NWP will result in more than minimal individual or cumulative adverse environmental effects or may be contrary to the public interest. The prospective permittee may submit a proposed mitigation plan with the PCN to expedite the process. The District Engineer will consider any proposed compensatory mitigation the applicant has included in the proposal in determining whether the net adverse environmental effects to the aquatic environment of the proposed work are minimal. If the District Engineer determines that the activity complies with the terms and conditions of the NWP and that the adverse effects on the aquatic environment are minimal, after considering mitigation, the District Engineer will notify the permittee and include any conditions the District Engineer deems necessary.

The District Engineer must approve any compensatory mitigation proposal before the permittee commences work. If the prospective permittee is required to submit a compensatory mitigation proposal with the PCN, the proposal may be either conceptual or detailed. If the prospective permittee elects to submit a compensatory mitigation plan with the PCN, the District Engineer will expeditiously review the proposed compensatory mitigation plan. The District Engineer must review the plan within 45 days of receiving a complete PCN and determine whether the conceptual or specific proposed mitigation would ensure no more than minimal adverse effects on the aquatic environment. If the net adverse effects of the project on the aquatic environment (after consideration of the compensatory mitigation proposal) are determined by the District Engineer to be minimal, the District Engineer will provide a timely written to the applicant. The response will state that the project can proceed under the terms and conditions of the NWP.

If the District Engineer determines that the adverse effects of the proposed work are more than minimal, then the District Engineer will notify the applicant either: (1) That the project does not qualify for authorization under the NWP and instruct the applicant on the procedures to seek authorization under an Individual Permit; (2) that the project is authorized under the NWP subject to the applicant's submission of a mitigation proposal that would reduce the adverse effects on the aquatic environment to the minimal level; or (3) that the project is authorized under the NWP with specific modifications or conditions. Where the District Engineer determines that mitigation is required to ensure no more than minimal adverse effects occur to the aquatic environment, the activity will be authorized within the 45-day PCN period. The authorization will include the necessary conceptual or specific mitigation or a requirement that the applicant submit a mitigation proposal that would reduce the adverse effects on the aquatic environment to the minimal level. When conceptual mitigation is included, or a mitigation plan is required under item (2) above, no work in waters of the US will occur until the District Engineer has approved a specific mitigation plan.

(e) Agency Coordination: The District Engineer will consider any comments from Federal and state agencies concerning the proposed activity's compliance with the terms and conditions of the NWPs and the need for mitigation to reduce the project's adverse environmental effects to a minimal level.

For activities requiring notification to the District Engineer that result in the loss of greater than 1/2-acre of waters of the US, the District Engineer will provide immediately (e.g., via facsimile transmission, overnight mail, or other expeditious manner) a copy to the appropriate Federal or state offices (USFWS, state natural resource or water quality agency, EPA, State Historic Preservation Officer (SHPO), and, if appropriate, the NMFS). With the exception of NWP 37, these agencies will then have 10 calendar days from the date the material is transmitted to telephone or fax the District Engineer notice that they intend to provide substantive, site-specific comments. If so contacted by an agency, the District Engineer will wait an additional 15 calendar days before making a decision on the notification. The District Engineer will fully consider agency comments received within the specified time frame, but will provide no response to the resource agency, except as provided below. The District Engineer will indicate in the administrative record associated with each notification that the resource agencies' concerns were considered. As required by section 305(b)(4)(B) of the Magnuson-Stevens Fishery Conservation and Management Act, the District Engineer will provide a response to NMFS within 30 days of receipt of any Essential Fish Habitat conservation recommendations. Applicants are encouraged to provide the Corps multiple copies of notifications to expedite agency notification.

(f) Wetland Delineations: Wetland delineations must be prepared in accordance with the current method required by the Corps (For NWP 29 see paragraph (b)(9)(iii) for parcels less than (1/4-acre in size). The permittee may ask the Corps to delineate the special aquatic site. There may be some delay if the Corps does the delineation. Furthermore, the 45-day period will not start until the wetland delineation has been completed and submitted to the Corps, where appropriate.

14. Compliance Certification. Every permittee who has received NWP verification from the Corps will submit a signed certification regarding the completed work and any required mitigation. The certification will be forwarded by the Corps with the authorization letter and will include:

(a) A statement that the authorized work was done in accordance with the Corps authorization, including any general or specific conditions;
(b) A statement that any required mitigation was completed in accordance with the permit conditions; and
(c) The signature of the permittee certifying the completion of the work and mitigation.

15. Use of Multiple Nationwide Permits. The use of more than one NWP for a single and complete project is prohibited, except when the acreage loss of waters of the US authorized by the NWPs does not exceed the acreage limit of the NWP with the highest specified acreage limit (e.g. if a road crossing over tidal waters is constructed under NWP 14, with associated bank stabilization authorized by NWP 13, the maximum acreage loss of waters of the US for the total project cannot exceed 1/3-acre).

16. Water Supply Intakes. No activity, including structures and work in navigable waters of the US or discharges of dredged or fill material, may occur in the proximity of a public water supply intake except where the activity is for repair of the public water supply intake structures or adjacent bank stabilization.

17. Shellfish Beds. No activity, including structures and work in navigable waters of the US or discharges of dredged or fill material, may occur in areas of concentrated shellfish populations, unless the activity is directly related to a shellfish harvesting activity authorized by NWP 4.

18. Suitable Material. No activity, including structures and work in navigable waters of the US or discharges of dredged or fill material, may consist of unsuitable material (e.g., trash, debris, car bodies, asphalt, etc.) and material used for construction or discharged must be free from toxic pollutants in toxic amounts (see section 307 of the CWA).

19. Mitigation. The District Engineer will consider the factors discussed below when determining the acceptability of appropriate and practicable mitigation necessary to offset adverse effects on the aquatic environment that are more than minimal.

(a) The project must be designed and constructed to avoid and minimize adverse effects to waters of the US to the maximum extent practicable at the project site (i.e., on site).
(b) Mitigation in all its forms (avoiding, minimizing, rectifying, reducing or compensating) will be required to the extent necessary to ensure that the adverse effects to the aquatic environment are minimal.

(c) Compensatory mitigation at a minimum one-for-one ratio will be required for all wetland impacts requiring a PCN, unless the District Engineer determines in writing that some other form of mitigation would be more environmentally appropriate and provides a project-specific waiver of this requirement. Consistent with National policy, the District Engineer will establish a preference for restoration of wetlands as compensatory mitigation, with preservation used only in exceptional circumstances.

(d) Compensatory mitigation (i.e., replacement or substitution of aquatic resources for those impacted) will not be used to increase the acreage losses allowed by the acreage limits of some of the NWPs. For example, 1/4-acre of wetlands cannot be created to change a 3/4-acre loss of wetlands to a 1/2-acre loss associated with NWP 39 verification. However, 1/2-acre of created wetlands can be used to reduce the impacts of a 1/2-acre loss of wetlands to the minimum impact level in order to meet the minimal impact requirement associated with NWPs.

(e) To be practicable, the mitigation must be available and capable of being done considering costs, existing technology, and logistics in light of the overall project purposes. Examples of mitigation that may be appropriate and practicable include, but are not limited to: reducing the size of the project; establishing and maintaining wetland or upland vegetated buffers to protect open waters such as streams; and replacing losses of aquatic resource functions and values by creating, restoring, enhancing, or preserving similar functions and values, preferably in the same watershed.

(f) Compensatory mitigation plans for projects in or near streams or other open waters will normally include a requirement for the establishment, maintenance, and legal protection (e.g., easements, deed restrictions) of vegetated buffers to open waters. In many cases, vegetated buffers will be the only compensatory mitigation required. Vegetated buffers should consist of native species. The width of the vegetated buffers required will address documented water quality or aquatic habitat loss concerns. Normally, the vegetated buffer will be 25 to 50 feet wide on each side of the stream, but the District Engineers may require slightly wider vegetated buffers to address documented water quality or habitat loss concerns. Where both wetlands and open waters exist on the project site, the Corps will determine the appropriate compensatory mitigation (e.g., stream buffers or wetlands compensation) based on what is best for the aquatic environment on a watershed basis. In cases where vegetated buffers are determined to be the most appropriate form of compensatory mitigation, the District Engineer may waive or reduce the requirement to provide wetland compensatory mitigation for wetland impacts.

(g) Compensatory mitigation proposals submitted with the ``notification" may be either conceptual or detailed. If conceptual plans are approved under the verification, then the Corps will condition the verification to require detailed plans be submitted and approved by the Corps prior to construction of the authorized activity in waters of the US.

(h) Permittees may propose the use of mitigation banks, in-lieu fee arrangements or separate activity-specific compensatory mitigation. In all cases that require compensatory mitigation, the mitigation provisions will specify the party responsible for accomplishing and/or complying with the mitigation plan.

20. Spawning Areas. Activities, including structures and work in navigable waters of the US or discharges of dredged or fill material, in spawning areas during spawning seasons must be avoided to the maximum extent practicable. Activities that result in the physical destruction (e.g., excavate, fill, or smother downstream by substantial turbidity) of an important spawning area are not authorized.

21. Management of Water Flows. To the maximum extent practicable, the activity must be designed to maintain preconstruction downstream flow conditions (e.g., location, capacity, and flow rates). Furthermore, the activity must not permanently restrict or impede the passage of normal or expected high flows (unless the primary purpose of the fill is to impound waters) and the structure or discharge of dredged or fill material must withstand expected high flows. The activity must, to the maximum extent practicable, provide for retaining excess flows from the site, provide for maintaining surface flow rates from the site similar to preconstruction conditions, and provide for not increasing water flows from the project site, relocating water, or redirecting water flow beyond preconstruction conditions. Stream channelizing will be reduced to the minimal amount necessary, and the activity must, to the maximum extent practicable, reduce adverse effects such as flooding or erosion downstream and upstream of the project site, unless the activity is part of a larger system designed to manage water flows. In most cases, it will not be a requirement to conduct detailed studies and monitoring of water flow.

This condition is only applicable to projects that have the potential to affect waterflows. While appropriate measures must be taken, it is not necessary to conduct detailed studies to identify such measures or require monitoring to ensure their effectiveness. Normally, the Corps will defer to state and local authorities regarding management of water flow.

22. Adverse Effects From Impoundments. If the activity creates an impoundment of water, adverse effects to the aquatic system due to the acceleration of the passage of water, and/or the restricting its flow shall be minimized to the maximum extent practicable. This includes structures and work in navigable waters of the US, or discharges of dredged or fill material.

23. Waterfowl Breeding Areas. Activities, including structures and work in navigable waters of the US or discharges of dredged or fill material, into breeding areas for migratory waterfowl must be avoided to the maximum extent practicable.

24. Removal of Temporary Fills. Any temporary fills must be removed in their entirety and the affected areas returned to their preexisting elevation.

25. Designated Critical Resource Waters. Critical resource waters include, NOAA-designated marine sanctuaries, National Estuarine Research Reserves, National Wild and Scenic Rivers, critical habitat for Federally listed threatened and endangered species, coral reefs, state natural heritage sites, and outstanding national resource waters or other waters officially designated by a state as having particular environmental or ecological significance and identified by the District Engineer after notice and opportunity for public comment. The District Engineer may also designate additional critical resource waters after notice and opportunity for comment.

(a) Except as noted below, discharges of dredged or fill material into waters of the US are not authorized by NWPs 7, 12, 14, 16, 17, 21, 29, 31, 35, 39, 40, 42, 43, and 44 for any activity within, or directly affecting, critical resource waters, including wetlands adjacent to such waters. Discharges of dredged or fill materials into waters of the US may be authorized by the above NWPs in National Wild and Scenic Rivers if the activity complies with General Condition 7. Further, such discharges may be authorized in designated critical habitat for Federally listed threatened or endangered species if the activity complies with General Condition 11 and the USFWS or the NMFS has concurred in a determination of compliance with this condition.

(b) For NWPs 3, 8, 10, 13, 15, 18, 19, 22, 23, 25, 27, 28, 30, 33, 34, 36, 37, and 38, notification is required in accordance with General Condition 13, for any activity proposed in the designated critical resource waters including wetlands adjacent to those waters. The District Engineer may authorize activities under these NWPs only after it is determined that the impacts to the critical resource waters will be no more than minimal.

26. Fills Within 100-Year Floodplains. For purposes of this General Condition, 100-year floodplains will be identified through the existing Federal Emergency Management Agency's (FEMA) Flood Insurance Rate Maps or FEMA-approved local floodplain maps.

(a) Discharges in Floodplain; Below Headwaters. Discharges of dredged or fill material into waters of the US within the mapped 100- year floodplain, below headwaters (i.e. five cfs), resulting in permanent above-grade fills, are not authorized by NWPs 39, 40, 42, 43, and 44.

(b) Discharges in Floodway; Above Headwaters. Discharges of dredged or fill material into waters of the US within the FEMA or locally mapped floodway, resulting in permanent above-grade fills, are not authorized by NWPs 39, 40, 42, and 44.

(c) The permittee must comply with any applicable FEMA-approved state or local floodplain management requirements.

27. Construction Period. For activities that have not been verified by the Corps and the project was commenced or under contract to commence by the expiration date of the NWP (or modification or revocation date), the work must be completed within 12-months after such date (including any modification that affects the project). For activities that have been verified and the project was commenced or under contract to commence within the verification period, the work must be completed by the date determined by the Corps. For projects that have been verified by the Corps, an extension of a Corps approved

completion date maybe requested. This request must be submitted at least one month before the previously approved completion date.

REGIONAL CONDITIONS WITHIN ILLINOIS:

NOTE: The Chicago District has proposed alternate regional conditions for work in McHenry, Kane, Lake, DuPage, Will and Cook Counties in Illinois. Information regarding Chicago District requirements can be accessed through their website at http://www.lrc.usace.army.mil/co-r/. If you have any questions regarding the Chicago District proposal, please contact Ms. Karon Marzec, Senior Project Manager, by telephone at 312/353-6400, ext. 4030 or e-mail karon.m.marzec@usace.army.mil.

1. Bank stabilization projects involving armoring of the streambank with riprap or the construction of retaining walls within High Value Subwatersheds exceeding 250 feet will require a PCN to the Corps of Engineers in accordance with Notification Condition (Number 13).
2. A proposed activity to be authorized under Nationwide Permits 12 or 14 within the Cache River Wetlands Areas (Alexander and Pulaski Counties), Kaskaskia River (Clinton, St. Clair, and Washington Counties), or Wabash River (Gallatin and White Counties) will require a PCN to the Corps of Engineers in accordance with the Notification Condition (Number 13).
3. Stormwater management facilities shall not be located within an intermittent stream.

High Value Subwatersheds – The state of Illinois has defined these areas through a combination of factors. Various sources of information were used to analyze and rank subwatersheds. Federal Threatened and Endangered Species, % of wetlands in the watershed, Natural Areas Inventory, and Biological Stream Categorization were factors used for High Value designation. A map highlighting these areas is attached with a numerical listing of the 8-digit hydrologic units.

D. Further Information

1. District Engineers have authority to determine if an activity complies with the terms and conditions of an NWP.
2. NWPs do not obviate the need to obtain other Federal, state, or local permits, approvals, or authorizations required by law.
3. NWPs do not grant any property rights or exclusive privileges.
4. NWPs do not authorize any injury to the property or rights of others.
5. NWPs do not authorize interference with any existing or proposed Federal project.

E. Definitions

Best Management Practices (BMPs): BMPs are policies, practices, procedures, or structures implemented to mitigate the adverse environmental effects on surface water quality resulting from development. BMPs are categorized as structural or non-structural. A BMP policy may affect the limits on a development.

Compensatory Mitigation: For purposes of Section 10/404, compensatory mitigation is the restoration, creation, enhancement, or in exceptional circumstances, preservation of wetlands and/or other aquatic resources for the purpose of compensating for unavoidable adverse impacts which remain after all appropriate and practicable avoidance and minimization has been achieved.

Creation: The establishment of a wetland or other aquatic resource where one did not formerly exist.

Enhancement: Activities conducted in existing wetlands or other aquatic resources that increase one or more aquatic functions.

Ephemeral Stream: An ephemeral stream has flowing water only during and for a short duration after, precipitation events in a typical year. Ephemeral stream beds are located above the water table year-round. Groundwater is not a source of water for the stream. Runoff from rainfall is the primary source of water for stream flow.

Farm Tract: A unit of contiguous land under one ownership that is operated as a farm or part of a farm.

Flood Fringe: That portion of the 100-year floodplain outside of the floodway (often referred to as ``floodway fringe").

Floodway: The area regulated by Federal, state, or local requirements to provide for the discharge of the base flood so the cumulative increase in water surface elevation is no more than a designated amount (not to exceed one foot as set by the National Flood Insurance Program) within the 100-year floodplain.

Independent Utility: A test to determine what constitutes a single and complete project in the Corps regulatory program. A project is considered to have independent utility if it would be constructed absent the construction of other projects in the project area. Portions of a multi-phase project that depend upon other phases of the project do not have independent utility. Phases of a project that would be constructed even if the other phases were not built can be considered as separate single and complete projects with independent utility.

Intermittent Stream: An intermittent stream has flowing water during certain times of the year, when groundwater provides water for stream flow. During dry periods, intermittent streams may not have flowing water. Runoff from rainfall is a supplemental source of water for stream flow.

Loss of Waters of the US: Waters of the US that include the filled area and other waters that are permanently adversely affected by flooding, excavation, or drainage because of the regulated activity. Permanent adverse effects include permanent above-grade, at-grade, or below-grade fills that change an aquatic area to dry land, increase the bottom elevation of a waterbody, or change the use of a waterbody. The acreage of loss of waters of the US is the threshold measurement of the impact to existing waters for determining whether a project may qualify for an NWP; it is not a net threshold that is calculated after considering compensatory mitigation that may be used to offset losses of aquatic functions and values. The loss of stream bed includes the linear feet of stream bed that is filled or excavated. Impacts to ephemeral streams are not included in the linear foot measurement of loss of stream bed for the purpose of determining compliance with the linear foot limits of NWPs 39, 40, 42, and 43. Waters of the US temporarily filled, flooded, excavated, or drained, but restored to preconstruction contours and elevations after construction, are not included in the measurement of loss of waters of the US.

Non-tidal Wetland: A non-tidal wetland is a wetland (i.e., a water of the US) that is not subject to the ebb and flow of tidal waters. The definition of a wetland can be found at 33 CFR 328.3(b). Non-tidal wetlands contiguous to tidal waters are located landward of the high tide line (i.e., spring high tide line).

Open Water: An area that, during a year with normal patterns of precipitation, has standing or flowing water for sufficient duration to establish an ordinary high water mark. Aquatic vegetation within the area of standing or flowing water is either non-emergent, sparse, or absent. Vegetated shallows are considered to be open waters. The term "open water" includes rivers, streams, lakes, and ponds. For the purposes of the NWPs, this term does not include ephemeral waters.

Perennial Stream: A perennial stream has flowing water year-round during a typical year. The water table is located above the stream bed for most of the year. Groundwater is the primary source of water for stream flow. Runoff from rainfall is a supplemental source of water for stream flow.

Permanent Above-grade Fill: A discharge of dredged or fill material into waters of the US, including wetlands, that results in a substantial increase in ground elevation and permanently converts part or all of the waterbody to dry land. Structural fills authorized by NWPs 3, 25, 36, etc. are not included.

Preservation: The protection of ecologically important wetlands or other aquatic resources in perpetuity through the implementation of appropriate legal and physical mechanisms. Preservation may include protection of upland areas adjacent to wetlands as necessary to ensure protection and/or enhancement of the overall aquatic ecosystem.

Restoration: Re-establishment of wetland and/or other aquatic resource characteristics and function(s) at a site where they have ceased to exist, or exist in a substantially degraded state.

Riffle and Pool Complex: Riffle and pool complexes are special aquatic sites under the 404(b)(1) Guidelines. Riffle and pool complexes sometimes characterize steep gradient sections of streams. Such stream sections are recognizable by their hydraulic characteristics. The rapid movement of water over a coarse substrate in riffles results in a rough flow, a turbulent surface, and high dissolved oxygen levels in the water. Pools are deeper areas associated with riffles. A slower stream velocity, a streaming flow, a smooth surface, and a finer substrate characterize pools.

Single and Complete Project: The term ``single and complete project" is defined at 33 CFR 330.2(i) as the total project proposed or accomplished by one owner/developer or partnership or other association of owners/developers (see definition of independent utility). For linear projects, the ``single and complete project" (i.e., a single and complete crossing) will apply to each crossing of a separate water of the US (i.e., a single waterbody) at that location. An exception is for linear projects crossing a single waterbody several times at separate and distant locations: each crossing is considered a single and complete project. However, individual channels in a braided stream or river, or individual arms of a large, irregularly shaped wetland or lake, etc., are not separate waterbodies.

Stormwater Management: Stormwater management is the mechanism for controlling stormwater runoff for the purposes of reducing downstream erosion, water quality degradation, and flooding and mitigating the adverse effects of changes in land use on the aquatic environment.

Stormwater Management Facilities: Stormwater management facilities are those facilities, including but not limited to, stormwater retention and detention ponds and BMPs, which retain water for a period of time to control runoff and/or improve the quality (i.e., by reducing the concentration of nutrients, sediments, hazardous substances and other pollutants) of stormwater runoff.

Stream Bed: The substrate of the stream channel between the ordinary high water marks. The substrate may be bedrock or inorganic particles that range in size from clay to boulders. Wetlands contiguous to the stream bed, but outside of the ordinary high water marks, are not considered part of the stream bed.

Stream Channelization: The manipulation of a stream channel to increase the rate of water flow through the stream channel. Manipulation may include deepening, widening, straightening, armoring, or other activities that change the stream cross-section or other aspects of stream channel geometry to increase the rate of water flow through the stream channel. A channelized stream remains a water of the US, despite the modifications to increase the rate of water flow.

Tidal Wetland: A tidal wetland is a wetland (i.e., water of the US) that is inundated by tidal waters. The definitions of a wetland and tidal waters can be found at 33 CFR 328.3(b) and 33 CFR 328.3(f), respectively. Tidal waters rise and fall in a predictable and measurable rhythm or cycle due to the gravitational pulls of the moon and sun. Tidal waters end where the rise and fall of the water surface can no longer be practically measured in a predictable rhythm due to masking by other waters, wind, or other effects. Tidal wetlands are located channelward of the high tide line (i.e., spring high tide line) and are inundated by tidal waters two times per lunar month, during spring high tides.

Vegetated Buffer: A vegetated upland or wetland area next to rivers, streams, lakes, or other open waters which separates the open water from developed areas, including agricultural land. Vegetated buffers provide a variety of aquatic habitat functions and values (e.g., aquatic habitat for fish and other aquatic organisms, moderation of water temperature changes, and detritus for aquatic food webs) and help improve or maintain local water quality. A vegetated buffer can be established by maintaining an existing vegetated area or planting native trees, shrubs, and herbaceous plants on land next to open- waters. Mowed lawns are not considered vegetated buffers because they provide little or no aquatic habitat functions and values. The establishment and maintenance of vegetated buffers is a method of compensatory mitigation that can be used in conjunction with the restoration, creation, enhancement, or preservation of aquatic habitats to

ensure that activities authorized by NWPs result in minimal adverse effects to the aquatic environment. (See General Condition 19.)

Vegetated Shallows: Vegetated shallows are special aquatic sites under the 404(b)(1) Guidelines. They are areas that are permanently inundated and under normal circumstances have rooted aquatic vegetation, such as seagrasses in marine and estuarine systems and a variety of vascular rooted plants in freshwater systems.

Waterbody: A waterbody is any area that in a normal year has water flowing or standing above ground to the extent that evidence of an ordinary high water mark is established. Wetlands contiguous to the waterbody are considered part of the waterbody.

High Value Subwatersheds

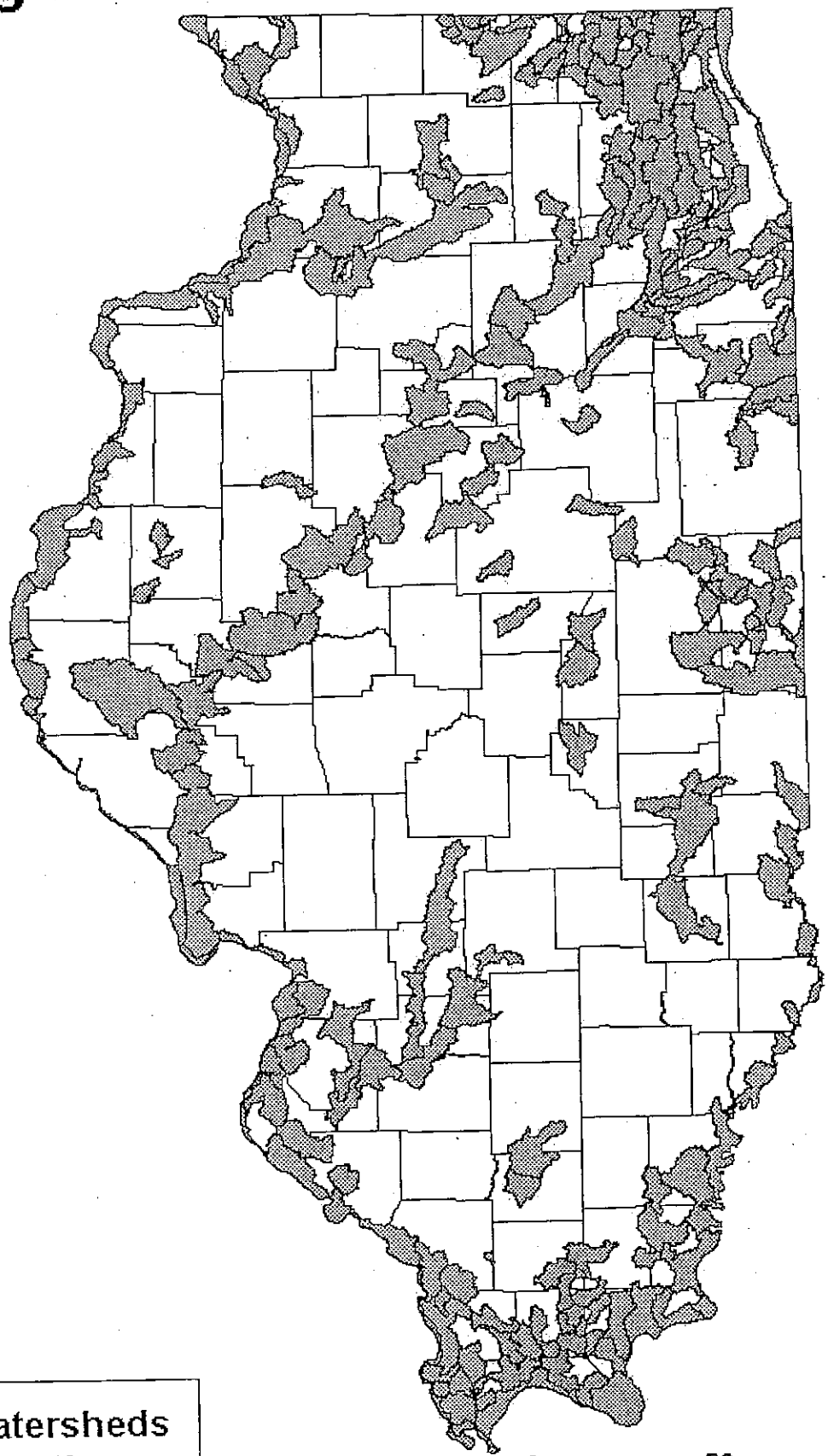

Watersheds
Counties

N

50 0 50 100 Miles

CATALOG UNIT*	SUB BASIN NAME
4040001	GREAT LAKES/CALUMET
4040002	GREAT LAKES/CALUMET
5120108	VERMILION (WABASH)
5120109	VERMILION (WABASH)
5120109	VERMILION (WABASH)
5120109	VERMILION (WABASH)
5120109	VERMILION (WABASH)
5120109	VERMILION (WABASH)
5120109	VERMILION (WABASH)
5120109	VERMILION (WABASH)
5120109	VERMILION (WABASH)
5120109	VERMILION (WABASH)
5120109	VERMILION (WABASH)
5120111	EMBARRAS/MID WABASH
5120112	EMBARRAS/MID WABASH
5120112	EMBARRAS/MID WABASH
5120112	EMBARRAS/MID WABASH
5120112	EMBARRAS/MID WABASH
5120113	LTL WAB/LOW WAB/SKILLET FK
5120114	LTL WAB/LOW WAB/SKILLET FK
5140203	SALINE/BAY
5140203	SALINE/BAY
5140203	SALINE/BAY
5140203	SALINE/BAY
5140203	SALINE/BAY
5140203	SALINE/BAY
5140203	SALINE/BAY
5140203	SALINE/BAY
5140203	SALINE/BAY
5140204	SALINE/BAY
5140204	SALINE/BAY
5140204	SALINE/BAY
5140204	SALINE/BAY
5140204	SALINE/BAY
5140204	SALINE/BAY
5140204	SALINE/BAY
5140204	SALINE/BAY
5140206	CACHE
5140206	CACHE
5140206	CACHE
5140206	CACHE
5140206	CACHE
5140206	CACHE
5140206	CACHE
5140206	CACHE
7060005	MISS NORTH
7060005	MISS NORTH
7060005	MISS NORTH
7060005	MISS NORTH
7060005	MISS NORTH
7060005	MISS NORTH

CATALOG UNIT*	SUB BASIN NAME
7080101	MISS NORTH
7080101	MISS NORTH
7080101	MISS NORTH
7080104	MISS NORTH CENTRAL
7080104	MISS NORTH CENTRAL
7080104	MISS NORTH CENTRAL
7090001	ROCK
7090003	PECATONICA
7090003	PECATONICA
7090004	PECATONICA
7090005	ROCK
7090005	ROCK
7090005	ROCK
7090005	ROCK
7090005	ROCK
7090005	ROCK
7090006	KISHWAUKEE
7090006	KISHWAUKEE
7090006	KISHWAUKEE
7090006	KISHWAUKEE
7090006	KISHWAUKEE
7090006	KISHWAUKEE
7090006	KISHWAUKEE
7090007	GREEN
7090007	GREEN
7110001	MISS CENTRAL
7110001	MISS CENTRAL
7110004	MISS CENTRAL
7110004	MISS CENTRAL
7110004	MISS CENTRAL
7110009	MISS SOUTH CENTRAL
7120001	KANKAKEE/IROQUOIS
7120001	KANKAKEE/IROQUOIS
7120001	KANKAKEE/IROQUOIS
7120001	KANKAKEE/IROQUOIS
7120001	KANKAKEE/IROQUOIS
7120001	KANKAKEE/IROQUOIS
7120001	KANKAKEE/IROQUOIS
7120002	KANKAKEE/IROQUOIS
7120002	KANKAKEE/IROQUOIS
7120002	KANKAKEE/IROQUOIS
7120003	GREAT LAKES/CALUMET
7120003	GREAT LAKES/CALUMET
7120003	GREAT LAKES/CALUMET
7120003	GREAT LAKES/CALUMET
7120003	GREAT LAKES/CALUMET
7120003	GREAT LAKES/CALUMET
7120004	DES PLAINES
7120004	DES PLAINES
7120004	DES PLAINES
7120004	DES PLAINES
7120004	DES PLAINES

CATALOG UNIT*	SUB BASIN NAME
7120004	DES PLAINES
7120004	DES PLAINES
7120004	DES PLAINES
7120004	DES PLAINES
7120004	DES PLAINES
7120004	DES PLAINES
7120004	DES PLAINES
7120004	DES PLAINES
7120004	DES PLAINES
7120004	DES PLAINES
7120004	DES PLAINES
7120004	DES PLAINES
7120004	DES PLAINES
7120004	DES PLAINES
7120005	UPPER ILLINOIS
7120005	UPPER ILLINOIS
7120005	UPPER ILLINOIS
7120006	UPPER FOX
7120006	UPPER FOX
7120006	UPPER FOX
7120006	UPPER FOX
7120006	UPPER FOX
7120006	UPPER FOX
7120006	UPPER FOX
7120006	UPPER FOX
7120006	UPPER FOX
7120007	LOWER FOX
7120007	LOWER FOX
7120007	LOWER FOX
7120007	LOWER FOX
7120007	LOWER FOX
7120007	LOWER FOX
7120007	LOWER FOX
7130001	UPPER ILLINOIS
7130001	UPPER ILLINOIS
7130001	UPPER ILLINOIS
7130001	UPPER ILLINOIS
7130002	VERMILION
7130002	VERMILION
7130003	MIDDLE ILLINOIS
7130003	MIDDLE ILLINOIS
7130003	MIDDLE ILLINOIS
7130003	MIDDLE ILLINOIS
7130004	MACKINAW
7130004	MACKINAW
7130004	MACKINAW
7130004	MACKINAW
7130005	SPOON
7130006	UPPER SANGAMON
7130006	UPPER SANGAMON
7130006	UPPER SANGAMON
7130007	LOWER SANGAMON/S FORK
7130008	LOWER SANGAMON/S FORK
7130009	SALT FK, SANGAMON
7130009	SALT FK, SANGAMON
7130010	LA MOINE
7130010	LA MOINE
7130010	LA MOINE
7130010	LA MOINE
7130011	LOWER ILLINOIS
7130011	LOWER ILLINOIS
7130011	LOWER ILLINOIS
7140101	MISS SOUTH CENTRAL
7140101	MISS SOUTH CENTRAL
7140101	MISS SOUTH CENTRAL
7140101	MISS SOUTH CENTRAL
7140101	MISS SOUTH CENTRAL
7140105	MISS SOUTH
7140105	MISS SOUTH
7140105	MISS SOUTH
7140105	MISS SOUTH
7140105	MISS SOUTH
7140105	MISS SOUTH
7140105	MISS SOUTH
7140106	BIG MUDDY
7140106	BIG MUDDY
7140106	BIG MUDDY
7140106	BIG MUDDY
7140106	BIG MUDDY
7140108	CACHE
7140108	CACHE
7140108	CACHE
7140108	CACHE
7140108	CACHE
7140201	UPPER KASKASKIA
7140202	MIDDLE KASK/SHOAL
7140202	MIDDLE KASK/SHOAL
7140202	MIDDLE KASK/SHOAL
7140203	MIDDLE KASK/SHOAL
7140203	MIDDLE KASK/SHOAL
7140204	LOWER KASKASKIA
7140204	LOWER KASKASKIA
7140204	LOWER KASKASKIA
7140204	LOWER KASKASKIA
7140204	LOWER KASKASKIA

* - Leading zero does not display for these 8-digit hydrologic units.

TEMPORARY CONCRETE BARRIER (BDE)

Effective: October 1, 2002 Revised: November 1, 2003

Revise Section 704 of the Standard Specifications to read:

"**SECTION 704. TEMPORARY CONCRETE BARRIER**

704.01 Description. This work shall consist of furnishing, placing, maintaining, relocating and removing precast concrete barrier at temporary locations as shown on the plans or as directed by the Engineer.

704.02 Materials. Materials shall meet the requirements of the following Articles of Section 1000 - Materials:

Item	Article/Section
(a) Portland Cement Concrete	1020
(b) Reinforcement Bars (Note 1)	1006.10(a)(b)
(c) Connecting Pins and Anchoring Pins	1006.09
(d) Connecting Loop Bars (Note 2)	
(e) Rapid Set Mortar (Note 3)	

Note 1. Reinforcement bars shall be Grade 400 (Grade 60).

Note 2. Connecting loop bars shall be smooth bars conforming to the requirements of ASTM A 36.

Note 3. Rapid set materials shall be obtained from the Department's approved list of Packaged, Dry, Rapid Hardening Cementitous Materials for Concrete Repairs. For a rapid set mortar mixture, one part packaged rapid set cement shall be combined with two parts fine aggregate, by volume or a packaged rapid set mortar shall be used. Mixing of the rapid set mortar shall be according to the manufacturer's instructions.

CONSTRUCTION REQUIREMENTS

704.03 General. Precast concrete barrier produced after October 1, 2002 shall meet National Cooperative Highway Research Program (NCHRP) Report 350, Category 3, Test Level 3 requirements and have the F shape. Precast concrete barrier shall be constructed according to the Bureau of Materials and Physical Research's Policy Memorandum "Quality Control/Quality Assurance Program for Precast Concrete Products", applicable portions of Sections 504 and 1020, and to the details shown on the plans.

Precast units shall not be removed from the casting beds until a flexural strength of 2,000 kPa (300 psi) or a compressive strength of 10,000 kPa (1400 psi) is attained. When the concrete has attained a compressive strength according to Article 1020.04, and not prior to four days after casting, the units may be loaded, shipped and used.

704.04 Installation. F shape barrier units shall be seated on bare, clean pavement or paved shoulder and pinned together in a smooth, continuous line at the exact locations provided by the Engineer. The barrier unit at each end of the installation shall be secured to the pavement or paved shoulder using six anchoring pins and protected with an impact attenuator as shown on the plans.

F shape and New Jersey shape barrier units shall not be mixed in the same run.

Barrier units or attachments damaged during transportation or handling, or by traffic during the life of the installation, shall be repaired or replaced by the Contractor at his/her expense. The Engineer will be the sole judge in determining which units or attachments require repair or replacement.

The temporary barriers shall be removed when no longer required by the contract. After removal, all anchoring holes in the pavement or paved shoulder shall be filled with a rapid set mortar. Only enough water to permit placement and consolidation by rodding shall be used and the material shall be struck-off flush.

704.05 New Jersey Shape Barrier. New Jersey shape barrier produced prior to October 1, 2002 according to earlier Department standards, may be used until January 1, 2008.

Barrier units or attachments damaged during transportation or handling, or by traffic during the life of the installation, shall be repaired or replaced by the Contractor at his/her expense. The Engineer will be the sole judge in determining which units or attachments require repair or replacement.

F shape and New Jersey shape barrier units shall not be mixed in the same run.

The barrier unit at each end of the installation shall be secured to the pavement or paved shoulder using six dowel bars and protected with an impact attenuator as shown on the plans.

The temporary barriers shall be removed when no longer required by the contract. After removal, all anchoring holes in the pavement or paved shoulder shall be filled with a rapid set mortar. Only enough water to permit placement and consolidation by rodding shall be used and the material shall be struck-off flush.

704.06 Method of Measurement. Temporary concrete barrier will be measured for payment in meters (feet) in place along the centerline of the barrier. When temporary concrete barrier is relocated within the limits of the jobsite, the relocated barrier will be measured for payment in meters (feet) in place along the centerline of the barrier.

704.07 Basis of Payment. When the Contractor furnishes the barrier units, this work will be paid for at the contract unit price per meter (foot) for TEMPORARY CONCRETE BARRIER or RELOCATE TEMPORARY CONCRETE BARRIER.

When the Department furnishes the barrier units, this work will be paid for at the contract unit price per meter (foot) for TEMPORARY CONCRETE BARRIER, STATE OWNED or RELOCATE TEMPORARY CONCRETE BARRIER, STATE OWNED.

Impact attenuators will be paid for separately."

TEMPORARY EROSION CONTROL (BDE)

Effective: November 1, 2002

Revise the fifth sentence of the third paragraph of Article 280.04(a) of the Standard Specifications to read:

"This work may be constructed of hay or straw bales, extruded UV resistant high density polyethylene panels, erosion control blanket, mulch barrier, aggregate barriers, excavation, seeding, or mulch used separately or in combination, as approved, by the Engineer."

Add the following paragraphs after the fifth paragraph of Article 280.04(a) of the Standard Specifications.

"A ditch check constructed of extruded, UV resistant, high density polyethylene panels, "M" pins and erosion control blanket shall consist of the following materials:

Extruded, UV resistant, high density polyethylene panels shall have a minimum height of 250 mm (10 in.) and minimum length of 1.0 m (39.4 in.). The panels shall have a 51 mm (2 in.) lip along the bottom of the panel. Each panel shall have a single rib thickness of 4 mm (5/32 in.) with a 12 mm (1/2 in.) distance between the ribs. The panels shall have an average apparent opening size equal to 4.75 mm (No. 4) sieve, with an average of 30 percent open area. The tensile strength of each panel shall be 26.27 kN/m (1800 lb/ft) in the machine direction and 7.3 kN/m (500 lb/ft) in the transverse direction when tested according to ASTM D 4595.

"M" pins shall be at least 76 mm (3 in.) by 686 mm (27 in.), constructed out of deformed grade C1008 D3.5 rod (0.211 in. diameter). The rod shall have a minimum tensile strength of 55 MPa (8000 psi).

Erosion control blanket shall conform to Article 251.04.

A section of erosion control blanket shall be placed transverse to the flowline direction of the ditch prior to the construction of the polyethylene ditch check. The length of the section shall extend from the top of one side of the ditch to the top of the opposite side of the ditch, while the width of the section shall be one roll width of the blanket. The upstream edge of the erosion control blanket shall be secured in a 100 mm (4 in.) trench. The blanket shall be secured in the trench with 200 mm (8 in.) staples placed at 300 mm (1 ft) intervals along the edge before the trench is backfilled. Once the

upstream edge of the blanket is secured, the downstream edge shall be secured with 200 mm (8 in.) staples placed at 300 mm (1 ft) intervals along the edge. The polyethylene ditch check shall be installed in the middle of the erosion control blanket, with the lip of each panel facing outward.

The ditch check shall consist of two panels placed back to back forming a single row. Placement of the first two panels shall be at the toe of the backslope or sideslope, with the panels extending across the bottom of the ditch. Subsequent panels shall extend both across the bottom of the ditch and up the opposite sideslope, as well as up the original backslope or sideslope at the distance determined by the Engineer.

The M pins shall be driven through the panel lips to secure the panels to the ground. M pins shall be installed in the center of the panels with adjacent panels overlapping the ends a minimum of 50 mm (2 in.). The pins shall be placed through both sets of panels at each overlap. They shall be installed at an interval of three M pins per one meter (39 in.) length of ditch check. The panels shall be wedged into the M pins at the top to ensure firm contact between the entire bottom of the panels and the soil."

TEMPORARY PORTABLE BRIDGE TRAFFIC SIGNALS (BDE)

Effective: August 1, 2003

Description. At the Contractor's option, temporary portable bridge traffic signals may be used in place of temporary bridge traffic signals. Work shall be according to Article 701.06(b) of the Standard Specifications except as follows:

Materials. Materials shall meet the following Articles of Section 1000 – Materials:

Item	Article/Section
(a) Traffic Signal Head	1078
(b) Electric Cable	1076.04
(c) Controller	1073
(d) Controller Cabinet	1074.03
(e) Detector Loop	1079

CONSTRUCTION REQUIREMENTS

General. The temporary portable bridge traffic signals shall be trailer-mounted units. The trailer-mounted units shall be set up securely and level. Each unit shall be self-contained and consist of two signal heads. The left signal head shall be mounted on a mast arm capable of extending over the travel lane. Each unit shall contain a solar cell system to facilitate battery charging. There shall be a minimum of 12 days backup reserve battery supply and the units shall be capable of operating with a 120 V power supply from a generator or electrical service.

All signal heads located over the travel lane shall be mounted at a minimum height of 5 m (17 ft) from the bottom of the signal back plate to the top of the road surface. All far right signal heads located outside the travel lane shall be mounted at a minimum height of 2.5 m (8 ft) from the bottom of the signal back plate to the top of the adjacent travel lane surface.

The long all red intervals for the traffic signal controller shall be adjustable up to 250 seconds in one-second increments.

As an alternative to detector loops, temporary portable bridge traffic signals may be equipped with microwave sensors or other approved methods of vehicle detection and traffic actuation. All portable traffic signal units shall be interconnected using hardwire communication cable or radio communication equipment. If radio communication is used, a site analysis shall be completed to ensure that there is no interference present that would affect the traffic signal operation. The radio equipment shall meet all applicable FCC requirements.

The temporary portable bridge traffic signal system shall meet the physical display and operational requirements of conventional traffic signals as specified in Part IV of the Manual on Uniform Traffic Control Devices (MUTCD). The signal system shall be designed to continuously operate over an ambient temperature range between -34 ºC (-30 ºF) and 48 ºC (120 ºF).

When not being utilized to inform and direct traffic, portable signals shall be treated as non-operating equipment according to Article 701.04(b)(3).

Basis of Payment. This work will be paid for according to Article 701.08(c).

TRAFFIC BARRIER TERMINALS (BDE)

Effective: January 1, 2003

Revise Article 631.05 of the Standard Specifications to read:

"**631.05 Traffic Barrier Terminal, Type 5 and Type 5A.** The face of the guardrail shall be installed flush with the face of the bridge rail or parapet."

Revise Article 631.06 of the Standard Specifications to read:

"**631.06 Traffic Barrier Terminal, Type 6.** When attaching the end shoe to concrete constructed with forms and with a thickness of 300 mm (12 in.) or less, the holes may be formed, core drilled or an approved 20 mm (3/4 in.) cast-in-place insert may be used.

When attaching the end shoe to concrete constructed with forms and with a thickness greater than 300 mm (12 in.), an approved M20 (3/4 in.) bolt with an approved expansion device may be used in lieu of formed or core drilled holes.

When attaching the end shoe to concrete constructed by slipforming, the holes shall be core drilled.

The tapered, parapet, wood block out shall be used on all appurtenances with a sloped face.

When no bridge approach curb is present, Type B concrete curb shall be constructed as shown on the plans according to Section 606."

Revise Article 631.07 of the Standard Specifications to read:

"**631.07 Traffic Barrier Terminal, Type 6B.** Attachment of the end shoe to concrete shall be according to Article 631.06 except the tapered, parapet, wood block out will not be required."

Delete the third and fourth paragraphs of Article 631.11 of the Standard Specifications.

Add the following paragraph to the end of Article 631.11 of the Standard Specifications:

"Construction of the Type B concrete curb for TRAFFIC BARRIER TERMINAL, TYPE 6 will be paid for according to Article 606.14."

TRAFFIC CONTROL DEFICIENCY DEDUCTION (BDE)

Effective: April 1, 1992 Revised: January 1, 2003

To ensure a prompt response to incidents involving the integrity of work zone traffic control, the Contractor shall provide a telephone number where a responsible individual can be contacted 24 hours-a-day.

When the Engineer is notified, or determines a traffic control deficiency exists, he/she will notify and direct the Contractor to correct the deficiency within a specified time. The specified time, which begins upon notification to the Contractor, will be from ½ hour to 12 hours based upon the urgency of the situation and the nature of the deficiency. The Engineer shall be the sole judge.

The deficiency may be any lack of repair, maintenance or non-compliance with the traffic control plan.

If the Contractor fails to correct the deficiency within the specified time, a daily monetary deduction will be imposed for each calendar day or fraction thereof the deficiency exists. The calendar day(s) will begin with notification to the Contractor and end with the Engineer's acceptance of the correction. The daily monetary deduction will be either $1,000 or 0.05 percent of the awarded contract value, whichever is greater.

In addition, if the Contractor fails to respond, the Engineer may correct the deficiency and the cost thereof will be deducted from monies due or which may become due the Contractor. This corrective action will in no way relieve the Contractor of his/her contractual requirements or responsibilities.

VERTICAL BARRICADES (BDE)

Effective: November 1, 2002 Revised: January 1, 2003

Add the following to Article 702.03 of the Standard Specifications:

"(h) Vertical Barricades. Vertical Barricades shall meet the requirements of the National Cooperative Highway Research Program (NCHRP) Report 350 and the special provision "Work Zone Traffic Control Devices". Vertical barricades may be used in lieu of cones, drums or Type I and Type II barricades to channelize traffic. Vertical barricades shall not be used in lane closure tapers."

WEIGHT CONTROL DEFICIENCY DEDUCTION

Effective: April 1, 2001 Revised: August 1, 2002

The Contractor shall provide accurate weights of materials delivered to the contract for incorporation into the work (whether temporary or permanent) and for which the basis of payment is by weight. These weights shall be documented on delivery tickets which shall identify the source of the material, type of material, the date and time the material was loaded, the contract number, the net weight, the tare weight when applicable and the identification of the transporting vehicle. For aggregates, the Contractor shall have the driver of the vehicle furnish or establish an acceptable alternative to provide the contract number and a copy of the material order to the source for each load. The source is defined as that facility that produces the final material product that is to be incorporated into the contract pay items.

The Department will conduct random, independent vehicle weight checks for material sources according to the procedures outlined in the Documentation Section Policy Statement of the Department's Construction Manual and hereby incorporated by reference. The results of the independent weight checks shall be applicable to all contracts containing this Special Provision. Should the vehicle weight check for a source result in the net weight of material on the vehicle exceeding the net weight of material shown on the delivery ticket by 0.50% (0.70% for aggregates) or more, the Engineer will document the independent vehicle weight check and immediately furnish a copy of the results to the Contractor. No adjustment in pay quantity will be made. Should the vehicle weight check for a source result in the net weight of material shown on the delivery ticket exceeding the net weight of material on the vehicle by 0.50% (0.70% for aggregates) or more, the Engineer will document the independent vehicle weight check and immediately furnish a copy of the results to the Contractor. The Engineer will adjust the net weight shown on the delivery ticket to the checked delivered net weight as determined by the independent vehicle weight check.

The Engineer will also adjust the method of measurement for all contracts for subsequent deliveries of all materials from the source based on the independent weight check. The net weight of all materials delivered to all contracts containing this Special Provision from this source, for which the basis of payment is by weight, will be adjusted by applying a correction factor "A" as determined by the following formula:

$$A = 1.0 - \left(\frac{B - C}{B}\right); \text{ Where } A \le 1.0; \ \left(\frac{B - C}{C}\right) > 0.50\% \text{ (0.70\% for aggregates)}$$

Where A = Adjustment factor
B = Net weight shown on delivery ticket
C = Net weight determined from independent weight check

The adjustment factor will be applied as follows:

Adjusted Net Weight = A x Delivery Ticket Net Weight

The adjustment factor will be imposed until the cause of the deficient weight is identified and corrected by the Contractor to the satisfaction of the Engineer. If the cause of the deficient weight is not identified and corrected within seven (7) calendar days, the source shall cease delivery of all materials to all contracts containing this Special Provision for which the basis of payment is by weight.

Should the Contractor elect to challenge the results of the independent weight check, the Engineer will continue to document the weight of material for which the adjustment factor would be applied. However, provided the Contractor furnishes the Engineer with written documentation that the source scale has been calibrated within seven (7) calendar days after the date of the independent weight check, adjustments in the weight of material paid for will not be applied unless the scale calibration demonstrates that the source scale was not within the specified Department of Agriculture tolerance.

At the Contractor's option, the vehicle may be weighed on a second independent Department of Agriculture certified scale to verify the accuracy of the scale used for the independent weight check.

WORK ZONE TRAFFIC CONTROL DEVICES (BDE)

Effective: January 1, 2003 Revised: April 1, 2003

Add the following to Article 702.01 of the Standard Specifications:

"All devices and combinations of devices shall meet the requirements of the National Cooperative Highway Research Program (NCHRP) Report 350 for their respective categories. The categories are as follows:

Category 1 includes small, lightweight, channelizing and delineating devices that have been in common use for many years and are known to be crashworthy by crash testing of similar devices or years of demonstrable safe performance. These include cones, tubular markers, flexible delineators and plastic drums with no attachments. Category 1 devices shall be crash tested and accepted or may be self-certified by the manufacturer.

Category 2 includes devices that are not expected to produce significant vehicular velocity change but may otherwise be hazardous. These include drums and vertical panels with lights, barricades and portable sign supports. Category 2 devices shall be crash tested and accepted for Test Level 3.

Category 3 includes devices that are expected to cause significant velocity changes or other potentially harmful reactions to impacting vehicles. These include crash cushions, truck mounted attenuators and other devices not meeting the definitions of Category 1 or 2. Category 3 devices shall be crash tested and accepted for Test Level 3.

Category 4 includes portable or trailer-mounted devices such as arrow boards, changeable message signs, temporary traffic signals and area lighting supports. Currently, there is no implementation date set for this category and it is exempt from the NCHRP 350 compliance requirement.

The Contractor shall provide a manufacturer's self-certification letter for each Category 1 device and an FHWA acceptance letter for each Category 2 and Category 3 device used on the contract. The letters shall state the device meets the NCHRP 350 requirements for its respective category and test level, and shall include a detail drawing of the device."

Delete the third, fourth and fifth paragraphs of Article 702.03(b) of the Standard Specifications.

Delete the third sentence of the first paragraph of Article 702.03(c) of the Standard Specifications.

Delete the fourth paragraph of Article 702.05(a) of the Standard Specifications.

Revise the sixth paragraph of Article 702.05(a) of the Standard Specifications to read:

> "When the work operations exceed four days, all signs shall be post mounted unless the signs are located on the pavement or define a moving or intermittent operation. When approved by the Engineer, a temporary sign stand may be used to support a sign at 1.2 m (5 ft) minimum where posts are impractical. Longitudinal dimensions shown on the plans for the placement of signs may be increased up to 30 m (100 ft) to avoid obstacles, hazards or to improve sight distance, when approved by the Engineer. "ROAD CONSTRUCTION AHEAD" signs will also be required on side roads located within the limits of the mainline "ROAD CONSTRUCTION AHEAD" signs."

Delete all references to "Type 1A barricades" and "wing barricades" throughout Section 702 of the Standard Specifications.

F SHAPE PARAPET

Effective December 6, 2002

Description. This work shall consist of constructing the bridge parapets according to the revised details included herein and the applicable Articles of Section 503 of the Standard Specifications.

The modifications to the quantities involved in the construction of the F shape parapets are not reflected in the bills of materials or the summary of quantities, however the Contractor will be paid for the quantities actually furnished at the unit prices bid for the work involved.

Notes: All edges shall have $\frac{3}{4}''$ chamfer.

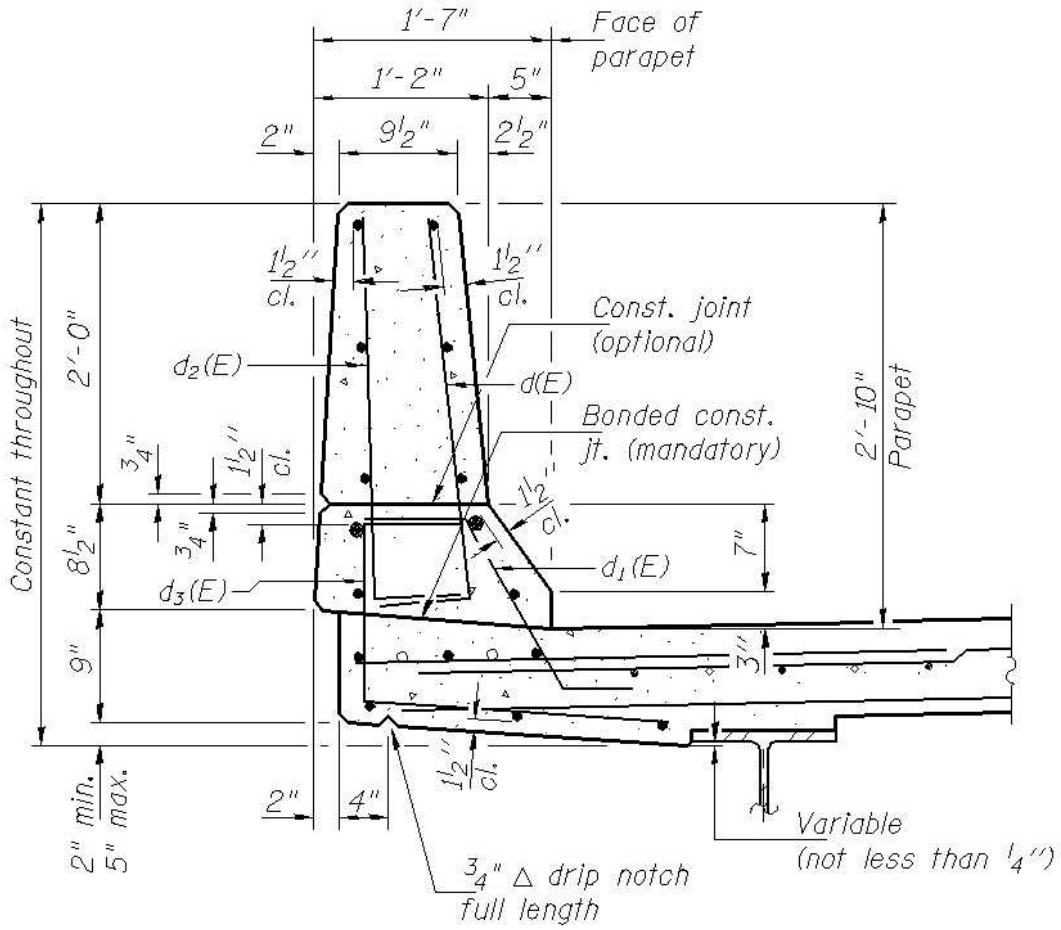

SECTION

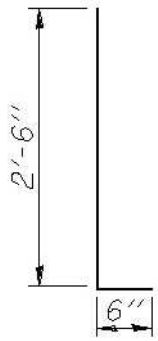

BARS d(E) & d₂(E)

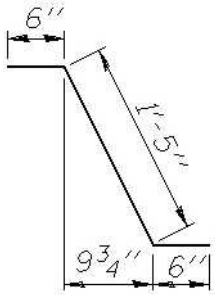

BAR d₁(E)

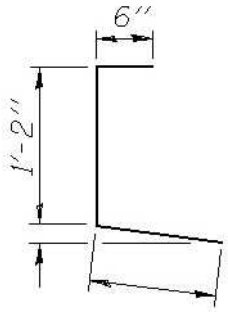

BAR d₃(E)

F SHAPE
CONCRETE PARAPET

REQUIRED CONTRACT PROVISIONS
FEDERAL-AID CONSTRUCTION CONTRACTS

		Page
I.	General	1
II.	Nondiscrimination	1
III.	Nonsegregated Facilities	3
IV.	Payment of Predetermined Minimum Wage	3
V.	Statements and Payrolls	6
VI.	Record of Materials, Supplies, and Labor	7
VIII.	Safety: Accident Prevention	7
IX.	False Statements Concerning Highway Projects	7
X.	Implementation of Clean Air Act and Federal Water Pollution Control Act	8
XI.	Certification Regarding Debarment, Suspension, Ineligibility, and Voluntary Exclusion	8
XII.	Certification Regarding Use of Contract Funds for Lobbying	9

ATTACHMENTS

A. Employment Preference for Appalachian Contracts (included in Appalachian contracts only)

I. GENERAL

1. These contract provisions shall apply to all word performed on the contract by the contractor's own organization and with the assistance of workers under the contractor's immediate superintendence and to all work performed on the contract by piecework, station work, or by subcontract.

2. Except as otherwise provided for in each section, the contractor shall insert in each subcontract all of the stipulations contained in these Required Contract Provisions, and further require their inclusion in any lower tier subcontract or purchase order that may in turn be made. The Required Contract Provisions shall not be incorporated by reference in any case. The prime contractor shall be responsible for compliance by any subcontractor or lower tier subcontractor with these Required Contract Provisions.

3. A breach of any of the stipulations contained in these Required Contract Provisions shall be sufficient grounds for termination of the contract.

4. A breach of the following clauses of the Required Contract Provisions may also be grounds for debarment as provided in 29 CFR 5.12:

Section I, paragraph 2;
Section IV, paragraphs 1, 2, 3, 4 and 7;
Section V, paragraphs 1 and 2a through 2g.

5. Disputes arising out of the labor standards provisions of Section IV (except paragraph 5) and Section V of these Required Contract Provisions shall not be subject to the general disputes clause of this contract. Such disputes shall be resolved in accordance with the procedures of the U.S. Department of Labor (DOL) as set forth in 29 CFR 5, 6 and 7. Disputes within the meaning of this clause include disputes between the contractor (or any of its subcontractors) and the contracting agency, the DOL, or the contractor's employees or their representatives.

6. Selection of Labor: During the performance of this contract, the contractor shall not:

a. Discriminate against labor from any other State, possession, or territory of the United States (except for employment preference for Appalachian contracts, when applicable, as specified in Attachment A), or

b. Employ convict labor for any purpose within the limits of the project unless it is labor performed by convicts who are on parole, supervised release, or probation.

II. NONDISCRIMINATION

(Applicable to all Federal-aid construction contracts and to all related subcontracts of $10,000 or more.)

1. Equal Employment Opportunity: Equal employment opportunity (EEO) requirements not to discriminate and to take affirmative action to assure equal opportunity as set forth under laws, executive orders, rules, regulations (28 CFR 35, 29 CFR 1630 and 41 CFR 60 (and orders of the Secretary of Labor as modified by the provisions prescribed herein, and imposed pursuant to 23 U.S.C. 140 shall constitute the EEO and specific affirmative action standards for the contractor's project activities under this contract. The Equal Opportunity Construction Contract Specifications set forth under 41 CFR 60-4.3 and the provisions of the American Disabilities Act of 1990 (42 U.S.C. 12101 et seq.) set forth under 28 CFR 35 and 29 CFR 1630 are incorporated by reference in this contract. In the execution of this contract, the contractor agrees to comply with the following minimum specific requirement activities of EEO:

a. The contractor will work with the State highway agency (SHA) and the Federal Government in carrying out EEO obligations and in their review of his/her activities under the contract.

b. The contractor will accept as his operating policy the following statement:

"It is the policy of this Company to assure that applicants are employed, and that employees are treated during employment, without regard to their race, religion, sex, color, national origin, age or disability. Such action shall include: employment, upgrading, demotion, or transfer; recruitment or recruitment advertising; layoff or termination; rates of pay or other forms of compensation; and selection for training, including apprenticeship, preapprenticeship, and/or on-the-job-training."

2. EEO Officer: The contractor will designate and make known to the SHA contracting officers an EEO Officer who will have the responsibility for an must be capable of effectively administering and promoting an active contractor program of EEO and who must be assigned adequate authority and responsibility to do so.

3. Dissemination of Policy: All members of the contractor's staff who are authorized to hire, supervise, promote, and discharge employees, or who recommend such action, or who are substantially involved in such action, will be made fully cognizant of, and will implement, the contractor's EEO policy and contractual responsibilities to provide EEO in each grade and classification of employment. To ensure that the above

agreement will be met, the following actions will be taken as a minimum:

a. Periodic meetings of supervisory and personnel office employees will be conducted before the start of work and then not less often than once every six months, at which time the contractor's EEO policy and its implementation will be reviewed and explained. The meetings will be conducted by the EEO Officer.

b. All new supervisory or personnel office employees will be given a thorough indoctrination by the EEO Officer, covering all major aspects of the contractor's EEO obligations within thirty days following their reporting for duty with the contractor.

c. All personnel who are engaged in direct recruitment for the project will be instructed by the EEO Officer in the contractor's procedures for locating and hiring minority group employees.

d. Notices and posters setting forth the contractor's EEO policy will be placed in areas readily accessible to employees, applicants for employment and potential employees.

e. The contractor's EEO policy and the procedures to implement such policy will be brought to the attention of employees by means of meetings, employee handbooks, or other appropriate means.

4. Recruitment: When advertising for employees, the contractor will include in all advertisements for employees the notation: "An Equal Opportunity Employer." All such advertisements will be placed in publications having a large circulation among minority groups in the area from which the project work force would normally be derived.

a. The contractor will, unless precluded by a valid bargaining agreement, conduct systematic and direct recruitment through public and private employees referral sources likely to yield qualified minority group applicants. To meet this requirement, the contractor will identify sources of potential minority group employees, and establish which such identified sources procedures whereby minority group applicants may be referred to the contractor for employment consideration.

b. In the event the contractor has a valid bargaining agreement providing for exclusive hiring hall referrals, he is expected to observe the provisions of that agreement to the extent that the system permits the contractor's compliance with EEO contract provisions. (The DOL has held that where implementation of such agreements have the effect of discriminating against minorities or women, or obligates the contractor to do the same, such implementation violates Executive Order 11246, as amended.)

c. The contractor will encourage his present employees to refer minority group applicants for employment. Information and procedures with regard to referring minority group applicants will be discussed with employees.

5. Personnel Actions: Wages, working conditions, and employee benefits shall be established and administered, and personnel actions of every type, including hiring, upgrading, promotion, transfer, demotion, layoff, and termination, shall be taken without regard to race, color, religion, sex, national origin, age or disability. The following procedures shall be followed:

a. The contractor will conduct periodic inspections of project sites to insure that working conditions and employee facilities do not indicate discriminatory treatment of project site personnel.

b. The contractor will periodically evaluate the spread of wages paid within each classification to determine any evidence of discriminatory wage practices.

c. The contractor will periodically review selected personnel actions in depth to determine whether there is evidence of discrimination. Where evidence is found, the contractor will promptly take corrective action. If the review indicates that the discrimination may extend beyond the actions reviewed, such corrective action shall include all affected persons.

d. The contractor will promptly investigate all complaints of alleged discrimination made to the contractor in connection with his obligations under this contract, will attempt to resolve such complaints, and will take appropriate corrective action within a reasonable time. If the investigation indicates that the discrimination may affect persons other than the complainant, such corrective action shall include such other persons. Upon completion of each investigation, the contractor will inform every complainant of all of his avenues of appeal.

6. Training and Promotion:

a. The contractor will assist in locating, qualifying, and increasing the skills of minority group and women employees, and applicants for employment.

b. Consistent with the contractor's work force requirements and as permissible under Federal and State regulations, the contractor shall make full use of training programs, i.e., apprenticeship, and on-the-job training programs for the geographical area of contract performance. Where feasible, 25 percent of apprentices or trainees in each occupation shall be in their first year of apprenticeship or training. In the event a special provision for training is provided under this contract, this subparagraph will be superseded as indicated in the special provision.

c. The contractor will advise employees and applicants for employment of available training programs and entrance requirements for each.

d. The contractor will periodically review the training and promotion potential of minority group and women employees and will encourage eligible employees to apply for such training and promotion.

7. Unions: If the contractor relies in whole or in part upon unions as a source of employees, the contractor will use his/her best efforts to obtain the cooperation of such unions to increase opportunities for minority groups and women within the unions, and to effect referrals by such unions of minority and female employees. Actions by the contractor either directly or through a contractor's association acting as agent will include the procedures set forth below:

a. The contractor will use best efforts to develop, in cooperation with the unions, joint training programs aimed toward qualifying more minority group members and women for membership in the unions and increasing the skills of minority group employees and women so that they may qualify for higher paying employment.

b. The contractor will use best efforts to incorporate an EEO clause into each union agreement to the end that such union will be contractually bound to refer applicants without regard to their race, color, religion, sex, national origin, age or disability.

c. The contractor is to obtain information as to the referral practices and policies of the labor union except that to the extent such information is within the exclusive possession of the labor union and such labor union refuses to furnish such information to the contractor, the contractor shall so certify to

the SHA and shall set forth what efforts have been made to obtain such information.

d. In the event the union is unable to provide the contractor with a reasonable flow of minority and women referrals within the time limit set forth in the collective bargaining agreement, the contractor will, through independent recruitment efforts, fill the employment vacancies without regard to race, color, religion, sex, national origin, age or disability; making full efforts to obtain qualified and/or quailifiable minority group persons and women. (The DOL has held that it shall be no excuse that the union with which the contractor has a collective bargaining agreement providing for exclusive referral failed to refer minority employees.) In the event the union referral practice prevents the contractor from meeting the obligations pursuant to Executive Order 11246, as amended, and these special provisions, such contractor shall immediately notify the SHA.

8. Selection of Subcontractors, Procurement of Materials and Leasing of Equipment: The contractor shall not discriminate on the grounds of race, color, religion, sex, national origin, age or disability in the selection and retention of subcontractors, including procurement of materials and leases of equipment.

a. The contractor shall notify all potential subcontractors and suppliers of his/her EEO obligations under this contract.

b. Disadvantaged business enterprises (DBE), as defined in 49 CFR 23, shall have equal opportunity to compete for and perform subcontracts which the contractor enters into pursuant to this contract. The contractor will use his best efforts to solicit bids from and to utilize DBE subcontractors or subcontractors with meaningful minority group and female representation among their employees. Contractors shall obtain lists of DBE construction firms from SHA personnel.

c. The contractor will use his best efforts to ensure subcontractor compliance with their EEO obligations.

9. Records and Reports: The contractor shall keep such records as necessary to document compliance with the EEO requirements. Such records shall be retained for a period of three years following completion of the contract work and shall be available at reasonable times and places for inspection by authorized representatives of the SHA and the FHWA.

a. The records kept by the contractor shall document the following:

(1) The number of minority and non-minority group members and women employed in each work classification on the project;

(2) The progress and efforts being made in cooperation with unions, when applicable, to increase employment opportunities for minorities and women;

(3) The progress and efforts being made in locating, hiring, training, qualifying, and upgrading minority and female employees; and

(4) The progress and efforts being made in securing the services of DBE subcontractors or subcontractors with meaningful minority and female representation among their employees.

b. The contractors will submit an annual report to the SHA each July for the duration of the project, indicating the number of minority, women, and non-minority group employees currently engaged in each work classification required by the contract work. This information is to be reported on Form FHWA-1391. If on-the-job training is being required by special provision, the contractor will be required to collect and report training data.

III. NONSEGREGATED FACILITIES

(Applicable to all Federal-aid construction contracts and to all related subcontracts of $10,000 or more.)

a. By submission of this bid, the execution of this contract or subcontract, or the consummation of this material supply agreement or purchase order, as appropriate, the bidder, Federal-aid construction contractor, subcontractor, material supplier, or vendor, as appropriate, certifies that the firm does not maintain or provide for its employees any segregated facilities at any of its establishments, and that the firm does not permit its employees to perform their services at any location, under its control, where segregated facilities are maintained. The firm agrees that a breach of this certification is a violation of the EEO provisions of this contract. The firm further certifies that no employee will be denied access to adequate facilities on the basis of sex or disability.

b. As used in this certification, the term “segregated facilities” means any waiting rooms, work areas, restrooms and washrooms, restaurants and other eating areas, timeclocks, locker rooms, and other storage or dressing areas, parking lots, drinking fountains, recreation or entertainment areas, transportation, and housing facilities provided for employees which are segregated by explicit directive, or are, in fact, segregated on the basis of race, color, religion, national origin, age or disability, because of habit, local custom, or otherwise. The only exception will be for the disabled when the demands for accessibility override (e.g. disabled parking).

c. The contractor agrees that it has obtained or will obtain identical certification from proposed subcontractors or material suppliers prior to award of subcontracts or consummation of material supply agreements of $10,000 or more and that it will retain such certifications in its files.

IV. PAYMENT OF PREDETERMINED MINIMUM WAGE

(Applicable to all Federal-aid construction contracts exceeding $2,000 and to all related subcontracts, except for projects located on roadways classified as local roads or rural minor collectors, which are exempt.)

1. General:

a. All mechanics and laborers employed or working upon the site of the work will be paid unconditionally and not less often than once a week and without subsequent deduction or rebate on any account [except such payroll deductions as are permitted by regulations (29 CFR 3) issued by the Secretary of Labor under the Copeland Act (40 U.S.C. 276c)] the full amounts of wages and bona fide fringe benefits (or cash equivalents thereof) due at time of payment. The payment shall be computed at wage rates not less than those contained in the wage determination of the Secretary of Labor (hereinafter “the wage determination”) which is attached hereto and made a part hereof, regardless of any contractual relationship which may be alleged to exist between the

contractor or its subcontractors and such laborers and mechanics. The wage determination (including any additional classifications and wage rates conformed under paragraph 2 of this Section IV and the DOL poster (WH-1321) or Form FHWA-1495) shall be posted at all times by the contractor and its subcontractors at the site of the work in a prominent and accessible place where it can be easily seen by the workers. For the purpose of this Section, contributions made or costs reasonably anticipated for bona fide fringe benefits under Section 1(b)(2) of the Davis-Bacon Act (40 U.S.C. 276a) on behalf of laborers or mechanics are considered wages paid to such laborers or mechanics, subject to the provisions of Section IV, paragraph 3b, hereof. Also, for the purpose of this Section, regular contributions made or costs incurred for more than a weekly period (but not less often than quarterly) under plans, funds, or programs, which cover the particular weekly period, are deemed to be constructively made or incurred during such weekly period. Such laborers and mechanics shall be paid the appropriate wage rate and fringe benefits on the wage determination for the classification of work actually performed, without regard to skill, except as provided in paragraphs 4 and 5 of this Section IV.

b. Laborers or mechanics performing work in more than one classification may be compensated at the rate specified for each classification for the time actually worked therein, provided, that the employer's payroll records accurately set forth the time spent in each classification in which work is performed.

c. All rulings and interpretations of the Davis-Bacon Act and related acts contained in 29 CFR 1, 3, and 5 are herein incorporated by reference in this contract.

2. Classification:

a. The SHA contracting officer shall require that any class of laborers or mechanics employed under the contract, which is not listed in the wage determination, shall be classified in conformance with the wage determination.

b. The contracting officer shall approve an additional classification, wage rate and fringe benefits only when the following criteria have been met:

(1) the work to be performed by the additional classification requested is not performed by a classification in the wage determination;

(2) the additional classification is utilized in the area by the construction industry;

(3) the proposed wage rate, including any bona fide fringe benefits, bears a reasonable relationship to the wage rates contained in the wage determination; and

(4) with respect to helpers, when such a classification prevails in the area in which the work is performed.

c. If the contractor or subcontractors, as appropriate, the laborers and mechanics (if known) to be employed in the additional classification or their representatives, and the contracting officer agree on the classification and wage rate (including the amount designated for fringe benefits where appropriate), a report of the action taken shall be sent by the contracting officer to the DOL, Administrator of the Wage and Hour Division, Employment Standards Administration, Washington, D.C. 20210. The Wage and Hour Administrator, or an authorized representative, will approve, modify, or disapprove every additional classification action within 30 days of receipt and so advise the contracting officer or will notify the contracting officer within the 30-day period that additional time is necessary.

d. In the event the contractor or subcontractors, as appropriate, the laborers or mechanics to be employed in the additional classification or their representatives, and the contracting officer do not agree on the proposed classification and wage rate (including the amount designated for fringe benefits, where appropriate), the contracting officer shall refer the question, including the views of all interested parties and the recommendation of the contracting officer, to the Wage and Hour Administrator for determination. Said Administrator, or an authorized representative, will issue a determination within 30 days of receipt and so advised the contracting officer or will notify the contracting officer within the 30-day period that additional time is necessary.

e. The wage rate (including fringe benefits where appropriate) determined pursuant to paragraph 2c or 2d of this Section IV shall be paid to all workers performing work in the additional classification from the first day on which work is performed in the classification.

3. Payment of Fringe Benefits:

a. Whenever the minimum wage rate prescribed in the contract for a class of laborers or mechanics includes a fringe benefit which is not expressed as an hourly rate, the contractor or subcontractors, as appropriate, shall either pay the benefit as stated in the wage determination or shall pay another bona fide fringe benefit or an hourly case equivalent thereof.

b. If the contractor or subcontractor, as appropriate, does not make payments to a trustee or other third person, he/she may consider as a part of the wages of any laborer or mechanic the amount of any cost reasonably anticipated in providing bona fide fringe benefits under a plan or program, provided that the Secretary of Labor has found, upon the written request of the contractor, that the applicable standards of the Davis-Bacon Act have been met. The Secretary of Labor may require the contractor to set aside in a separate account assets for the meeting of obligations under the plan or program.

4. Apprentices and Trainees (Programs of the U.S. DOL) and Helpers:

a. Apprentices:

(1) Apprentices will be permitted to work at less than the predetermined rate for the work they performed when they are employed pursuant to and individually registered in a bona fide apprenticeship program registered with the DOL, Employment and Training Administration, Bureau of Apprenticeship and Training, or with a State apprenticeship agency recognized by the Bureau, or if a person is employed in his/her first 90 days of probationary employment as an apprentice in such an apprenticeship program, who is not individually registered in the program, but who has been certified by the Bureau of Apprenticeship and Training or a State apprenticeship agency (where appropriate) to be eligible for probationary employment as an apprentice.

(2) The allowable ratio of apprentices to journeyman-level employees on the job site in any craft classification shall not

be greater than the ratio permitted to the contractor as to the entire work force under the registered program. Any employee listed on a payroll at an apprentice wage rate, who is not registered or otherwise employed as stated above, shall be paid not less than the applicable wage rate listed in the wage determination for the classification of work actually performed. In addition, any apprentice performing work on the job site in excess of the ratio permitted under the registered program shall be paid not less than the applicable wage rate on the wage determination for the work actually performed. Where a contractor or subcontractor is performing construction on a project in a locality other than that in which its program is registered, the ratios and wage rates (expressed in percentages of the journeyman-level hourly rate) specified in the contractor's or subcontractor's registered program shall be observed.

(3) Every apprentice must be paid at not less than the rate specified in the registered program for the apprentice's level of progress, expressed as a percentage of the journeyman-level hourly rate specified in the applicable wage determination. Apprentices shall be paid fringe benefits in accordance with the provisions of the apprenticeship program. If the apprenticeship program does not specify fringe benefits, apprentices must be paid the full amount of fringe benefits listed on the wage determination for the applicable classification. If the Administrator for the Wage and Hour Division determines that a different practice prevails for the applicable apprentice classification, fringes shall be paid in accordance with that determination.

(4) In the event the Bureau of Apprenticeship and Training, or a State apprenticeship agency recognized by the Bureau, withdraws approval of an apprenticeship program, the contractor or subcontractor will no longer be permitted to utilize apprentices at less than the applicable predetermined rate for the comparable work performed by regular employees until an acceptable program is approved.

b. Trainees:

(1) Except as provided in 29 CFR 5.16, trainees will not be permitted to work at less than the predetermined rate for the work performed unless they are employed pursuant to and individually registered in a program which has received prior approval, evidenced by formal certification by the DOL, Employment and Training Administration.

(2) The ratio of trainees to journeyman-level employees on the job site shall not be greater than permitted under the plan approved by the Employment and Training Administration. Any employee listed on the payroll at a trainee rate who is not registered and participating in a training plan approved by the Employment and Training Administration shall be paid not less than the applicable wage rate on the wage determination for the classification of work actually performed. In addition, any trainee performing work on the job site in excess of the ratio permitted under the registered program shall be paid not less than the applicable wage rate on the wage determination for the work actually performed.

(3) Every trainee must be paid at not less than the rate specified in the approved program for his/her level of progress, expressed as a percentage of the journeyman-level hourly rate specified in the applicable wage determination. Trainees shall be paid fringe benefits in accordance with the provisions of the trainee program. If the trainee program does not mention fringe benefits, trainees shall be paid the full amount of fringe benefits listed on the wage determination unless the Administrator of the Wage and Hour Division determines that there is an apprenticeship program associated with the corresponding journeyman-level wage rate on the wage determination which provides for less than full fringe benefits for apprentices, in which cases such trainees shall receive the same fringe benefits as apprentices.

(4) In the event the Employment and Training Administration withdraws approval of a training program, the contractor or subcontractor will no longer be permitted to utilize trainees at less than the applicable predetermined rate for the work performed until an acceptable program is approved.

c. Helpers:
Helpers will be permitted to work on a project if the helper classification is specified and defined on the applicable wage determination or is approved pursuant to the conformance procedure set forth in Section IV. 2. Any worker listed on a payroll at a helper wage rate, who is not a helper under a approved definition, shall be paid not less than the applicable wage rate on the wage determination for the classification of work actually performed.

5. Apprentices and Trainees (Programs of the U.S. DOT):

Apprentices and trainees working under apprenticeship and skill training programs which have been certified by the Secretary of Transportation as promoting EEO in connection with Federal-aid highway construction programs are not subject to the requirements of paragraph 4 of this Section IV. The straight time hourly wage rates for apprentices and trainees under such programs will be established by the particular programs. The ratio of apprentices and trainees to journeymen shall not be greater than permitted by the terms of the particular program.

6. Withholding:

The SHA shall upon its own action or upon written request of an authorized representative of the DOL withhold, or cause to be withheld, from the contractor or subcontractor under this contract or any other Federal contract with the same prime contractor or any other Federally-assisted contract subject to Davis-Bacon prevailing wage requirements which is held by the same prime contractor, as much of the accrued payments or advances as may be considered necessary to pay laborers and mechanics, including apprentices, trainee's and helpers, employed by the contractor or any subcontractor the full amount of wages required by the contract. In the event of failure to pay any laborer or mechanic, including any apprentice, trainee, or helper, employed or working on the site of the work, all or part of the wages required by the contract, the SHA contracting officer may, after written notice to the contractor, take such action as may be necessary to cause the suspension of any further payment, advance, or guarantee of funds until such violations have ceased.

7. Overtime Requirements:

No contractor or subcontractor contracting for any part of the contract work which may require or involve the employment of laborers, mechanics, watchmen, or guards (including apprentices, trainees, and helpers described in paragraphs 4 and 5 above) shall require or permit any laborer, mechanic, watchman, or guard in any workweek in which he/she is employed on such work, to work in excess of 40 hours in such workweek unless such laborer, mechanic, watchman, or guard receives compensation at a rate not less than one-and-one-half times his/her basic rate of pay for all hours worked in excess of 40 hours in such workweek.

8. Violation:

Liability for Unpaid Wages; Liquidated Damages: In the event of any violation of the clause set forth in paragraph 7 above, the contractor and any subcontractor responsible thereof shall be liable to the affected employee for his/her unpaid wages. In addition, such contractor and subcontractor shall be liable to the United States (in the case of work done under contract for the District of Columbia or a territory, to such District or to such territory) for liquidated damages. Such liquidated damages shall be computed with respect to each individual laborer, mechanic, watchman, or guard employed in violation of the clause set forth in paragraph 7, in the sum of $10 for each calendar day on which such employee was required or permitted to work in excess of the standard work week of 40 hours without payment of the overtime wages required by the clause set forth in paragraph 7.

9. Withholding for Unpaid Wages and Liquidated Damages:

The SHA shall; upon its own action or upon written request of any authorized representative of the DOL withhold, or cause to be withheld, from any monies payable on account of work performed by the contractor or subcontractor under any such contract or any other Federal contract with the same prime contractor, or any other Federally-assisted contract subject to the Contract Work Hours and Safety Standards Act, which is held by the same prime contractor, such sums as may be determined to be necessary to satisfy any liabilities of such contractor or subcontractor for unpaid wages and liquidated damages as provided in the clause set forth in paragraph 8 above.

V. STATEMENTS AND PAYROLLS

(Applicable to all Federal-aid construction contracts exceeding $2,000 and to all related subcontracts, except for projects located on roadways classified as local roads or rural collectors, which are exempt.)

1. Compliance with Copeland Regulations (29 CFR 3):

The contractor shall comply with the Copeland Regulations of the Secretary of Labor which are herein incorporated by reference.

2. Payrolls and Payroll Records:

a. Payrolls and basic records relating thereto shall be maintained by the contractor and each subcontractor during the course of the work and preserved for a period of 3 years from the date of completion of the contract for all laborers, mechanics, apprentices, trainees, watchmen, helpers, and guards working at the site of the work.

b. The payroll records shall contain the name, social security number, and address of each such employee; his or her correct classification; hourly rates of wages paid (including rates of contributions or costs anticipated for bona fide fringe benefits or cash equivalent thereof the types described in Section 1(b)(2)(B) of the Davis Bacon Act); daily and weekly number of hours worked; deductions made; and actual wages paid. In addition, for Appalachian contracts, the payroll records shall contain a notation indicating whether the employee does, or does not, normally reside in the labor area as defined in Attachment A, paragraph 1. Whenever the Secretary of Labor, pursuant to Section IV, paragraph 3b, has found that the wages of any laborer or mechanic include the amount of any costs reasonably anticipated in providing benefits under a plan or program described in Section 1(b)(2)(B) of the Davis Bacon Act, the contractor and each subcontractor shall maintain records which show that the commitment to provide such benefits is enforceable, that the plan or program is financially responsible, that the plan or program has been communicated in writing to the laborers or mechanics affected, and show the cost anticipated or the actual cost incurred in providing benefits. Contractors or subcontractors employing apprentices or trainees under approved programs shall maintain written evidence of the registration of apprentices and trainees, and ratios and wage rates prescribed in the applicable programs.

c. Each contractor and subcontractor shall furnish, each week in which any contract work is performed, to the SHA resident engineer a payroll of wages paid each of its employees (including apprentices trainees, and helpers, described in Section IV, paragraphs 4 and 5, and watchmen and guards engaged on work during the preceding weekly payroll period).

The payroll submitted shall set out accurately and completely all of the information required to be maintained under paragraph 2b of this Section V.

This information may be submitted in any form desired. Optional Form WH-347 is available for this purpose and may be purchased from the Superintendent of Documents (Federal stock number 029-005-0014-1), U.S. Government Printing Office, Washington, D.C. 20402. The prime contractor is responsible for the submission of copies of payrolls by all suncontractors.

d. Each payroll submitted shall be accompanied by a "Statement of Compliance," signed by the Contractor or subcontractor or his/her agent who pays or supervises the payment of the persons employed under the contract and shall certify the following:

(1) that the payroll for the payroll period contains the information required to be maintained under paragraph 2b of this Section V and that such information is correct and complete;

(2) that such laborer or mechanic (including each helper, apprentice, and trainee) employed on the contract during the payroll period has been paid the full weekly wages earned, without rebate, either directly or indirectly, and that no deductions have been made either directly or indirectly from the full wages earned, other than permissible deductions as set forth in the Regulations, 29 CFR 3;

(3) that each laborer or mechanic has been paid not less that the applicable wage rate and fringe benefits or cash equivalent for the classification of worked performed, as specified in the applicable wage determination incorporated into the contract.

e. The weekly submission of a properly executed certification set forth on the reverse side of Optional Form WH-347 shall satisfy the requirement for submission of the "Statement of Compliance" required by paragraph 2d of this Section V.

f. The falsification of any of the above certifications may subject the contractor to civil or criminal prosecution under 18 U/S. C. 1001 and 31 U.S.C. 231.

g. The contractor or subcontractor shall make the records required under paragraph 2b of this Section V available for

inspection, copying, or transcription by authorized representatives of the SHA, the FHWA, or the DOL, and shall permit such representatives to interview employees during working hours on the job. If the contractor or subcontractor fails to submit the required records or to make them available, the SHA, the FHWA, the DOL, or all may, after written notice to the contractor, sponsor, applicant, or owner, take such actions as may be necessary to cause the suspension of any further payment, advance, or guarantee of funds. Furthermore, failure to submit the required records upon request or to make such records available may be grounds for debarment action pursuant to 29 CFR 5.12.

VI. RECORD OF MATERIALS, SUPPLIES, AND LABOR

1. On all federal-aid contracts on the national highway system, except those which provide solely for the installation of protective devices at railroad grade crossings, those which are constructed on a force account or direct labor basis, highway beautification contracts, and contracts for which the total final construction cost for roadway and bridge is less than $1,000,000 (23 CFR 635) the contractor shall:

a. Become familiar with the list of specific materials and supplies contained in Form FHWA-47, "Statement of Materials and Labor Used by Contractor of Highway Construction Involving Federal Funds," prior to the commencement of work under this contract.

b. Maintain a record of the total cost of all materials and supplies purchased for and incorporated in the work, and also of the quantities of those specific materials and supplies listed on Form FHWA-47, and in the units shown on Form FHWA-47.

c. Furnish, upon the completion of the contract, to the SHA resident engineer on /Form FHWA-47 together with the data required in paragraph 1b relative to materials and supplies, a final labor summary of all contract work indicating the total hours worked and the total amount earned.

2. At the prime contractor's option, either a single report covering all contract work or separate reports for the contractor and for each subcontract shall be submitted.

VII. SUBLETTING OR ASSIGNING THE CONTRACT

1. The contractor shall perform with its own organization contract work amounting to not less than 30 percent (or a greater percentage if specified elsewhere in he contract) of the total original contract price, excluding any specialty items designated by the State. Specialty items may be performed by subcontract and the amount of any such specialty items performed may be deducted form the total original contract price before computing the amount of work required to be performed by the contractor's own organization (23 CFR 635).

a. "Its own organization" shall be construed to include only workers employed and paid directly by the prime contractor and equipment owned or rented by the prime contractor, with or without operators. Such term does not include employees or equipment of a subcontractor, assignee, or agent of the prime contractor.

b. "Specialty Items" shall be construed to be limited to work that requires highly specialized knowledge, abilities, or equipment not ordinarily available in the type of contracting organizations qualified and expected to bid on the contract as a whole and in general are to be limited to minor components of the overall contract.

2. The contract amount upon which the requirements set forth in paragraph 1 of Section VII is computed includes the cost of material and manufactured products which are to be purchased or produced by the contractor under the contract provisions.

3. The contractor shall furnish (a) a competent superintendent or supervisor who is employed by the firm, has full authority to direct performance of the work in accordance with the contract requirements, and is in charge of all construction operations (regardless of who performs the work) and (b) such other of its own organizational resources (supervision, management, and engineering services) as the SHA contracting officer determines is necessary to assure the performance of the contract.

4. No portion of the contract shall be sublet, assigned or otherwise disposed of except with the written consent of the SHA contracting officer, or authorized representative, and such consent when given shall not be construed to relieve the contractor of any responsibility for the fulfillment of the contract.

Written consent will be given only after the SHA has assured that each subcontract is evidenced in writing and that it contains all pertinent provisions and requirements of the prime contract.

VIII. SAFETY: ACCIDENT PREVENTION

1. In the performance of this contract the contractor shall comply with all applicable Federal, State, and local laws governing safety, health, and sanitation (23 CFR 635). The contractor shall provide all safeguards, safety devices and protective equipment and take any other needed actions as it determines, or as the SHA contracting officer may determine, to be reasonably necessary to protect the life and health of employees on the job and the safety of the public and to protect property in connection with the performance of the work covered by the contract.

2. It is a condition of this contract, and shall be made a condition of each subcontract, which the contractor enters into pursuant to this contract, that the contractor and any subcontractor shall not permit any employee, in performance of the contract, to work in surroundings or under conditions which are unsanitary, hazardous or dangerous to his/her health or safety, as determined under construction safety and health standards (29 CFR 1926) promulgated by the Secretary of Labor, in accordance with Section 107 of the Contract Work Hours and Safety Standards Act (40 U.S. C. 333).

3. Pursuant to 29 CFR 1926.3, it is a condition of this contract that the Secretary of Labor or authorized representative thereof, shall have right of entry to any site of contract performance to inspect or investigate the matter of compliance with the construction safety and health standards and to carry out the duties of the Secretary under Section 107 of the Contract Work Hours and Safety Standards Act (40 U.S.C. 333).

IX. FALSE STATEMENTS CONCERNING HIGHWAY PROJECTS

In order to assure high quality and durable construction in conformity with approved plans and specifications and a high degree of reliability on statements and representations made by engineers, contractors, suppliers, and workers on Federal-aid highway projects, it is essential that all persons concerned with the project perform their functions as carefully, thoroughly, and honestly as possible. Willful falsification,

distortion, or misrepresentation with respect to any facts related to the project is a violation of Federal law. To prevent any misunderstanding regarding the seriousness of these and similar acts, the following notice shall be posted on each Federal-aid highway project (23 CFR 635) in one or more places where it is readily available to all persons concerned with the project:

NOTICE TO ALL PERSONNEL ENGAGED ON FEDERAL-AID HIGHWAY PROJECTS

18 U.S.C. 1020 reads as follows:

"Whoever, being an officer, agent or employee of the United States, or of any State or Territory, or whoever, whether a person, association, firm, or corporation, knowingly makes any false statement, false representation, or false report as to the character, quality, quantity, or cost of the material used or to be used, or the quantity or quality of the work performed or to be performed, or the cost thereof in connection with the submission of plans, maps, specifications, contracts, or costs of construction on any highway or related project submitted for approval to the Secretary of Transportation; or

Whoever knowingly makes any false statement, false representation, false report or false claim with respect to the character, quality, quantity, or cost of any work performed or to be performed, or materials furnished or to be furnished, in connection with the construction of any highway or related project approved by the Secretary of Transportation; or

Whoever knowingly makes any false statement or false representation as to material fact in any statement, certificate, or report submitted pursuant to provisions of the Federal-aid Roads Act approved July 1, 1916, (39 Stat. 355), as amended and supplemented;

Shall be fined not more than $10,000 or imprisoned not more than 5 years or both."

X. IMPLEMENTATION OF CLEAN AIR ACT AND FEDERAL WATER POLLUTION CONTROL ACT

(Applicable to all Federal-aid construction contracts and to all related subcontracts of $100,000 or more).

By submission of this bid or the execution of this contract, or subcontract, as appropriate, the bidder, Federal-aid construction contractor, or subcontractor, as appropriate, will be deemed to have stipulated as follows:

1. That any facility that is or will be utilized in the performance of this contract, unless such contract is exempt under the Clean Air Act, as amended (42 U.S.C. 1857 et seq., as amended by Pub.L. 91-604), and under the Federal Water Pollution Control Act, as amended (33 U.S.C. 1251 et seq., as amended by Pub.L. 92-500), Executive Order 11738, and regulations in implementation thereof (40 CFR 15) is not listed, on the date of contract award, on the U.S. Environmental Protection Agency (EPA) List of Violating Facilities pursuant to 40 CFR 15.20.

2. That the firm agrees to comply and remain in compliance with all the requirements of Section 114 of the Clean Air Act and Section 308 of the Federal Water Pollution Control Act and all regulations and guidelines listed thereunder.

3. That the firm shall promptly notify the SHA of the receipt of any communication from the Director, Office of Federal Activities, EPA indicating that a facility that is or will be utilized for the contract is under consideration to be listed on the EPA List of Violating Facilities.

4. That the firm agrees to include or cause to be included the requirements of paragraph 1 through 4 of this Section X in every nonexempt subcontract, and further agrees to take such action as the government may direct as a means of enforcing such requirements.

XI. CERTIFICATION REGARDING DEBARMENT, SUSPENSION, INELIGIBILITY AND VOLUNTARY EXCLUSION

1. Instructions for Certification - Primary Covered Transactions:

(Applicable to all Federal-aid contracts - 49 CFR 29)

a. By signing and submitting this proposal, the prospective primary participant is providing the certification set out below.

b. The inability of a person to provide the certification set out below will not necessarily result in denial of participation in this covered transaction. The prospective participant shall submit an an explanation of why it cannot provide the certification set out below. The certification or explanation will be considered in connection with the department or agency's determination whether to enter into this transaction. However, failure of the prospective primary participant to furnish a certification or an explanation shall disqualify such a person from participation in this transaction.

c. The certification in this clause is a material representation of fact upon which reliance was placed when the department or agency determined to enter into this transaction. If it is later determined that the prospective primary participant knowingly rendered an erroneous certification, in addition to other remedies available to the Federal Government, the department or agency may terminate this transaction for cause of default.

d. The prospective primary participant shall provide immediate written notice to the department or agency to whom this proposal is submitted if any time the prospective primary participant learns that its certification was erroneous when submitted or has become erroneous by reason of changed circumstances.

e. The terms "covered transaction," "debarred," "suspended," "ineligible,""lower tier covered transaction," "participant," "person," "primary covered transaction," "principal," "proposal," and "voluntarily excluded," as used in this clause, have the meanings set out in the Definitions and Coverage sections of rules implementing Executive Order 12549. You may contact the department or agency to which this proposal is submitted for assistance in obtaining a copy of those regulations.

f. The prospective primary participant agrees by submitting this proposal that, should the proposed covered transaction be entered into, it shall not knowingly enter into any lower tier covered transaction with a person who is debarred, suspended, declared ineligible, or voluntarily excluded from participation in this covered transaction, unless authorized by the department or agency entering into this transaction.

g. The prospective primary participant further agrees by submitting this proposal that it will include the clause titled

"Certification Regarding Debarment, Suspension, Ineligibility and Voluntary Exclusion-Lower Tier Covered Transaction," provided by the department or agency entering into this covered transaction, without modification in all lower tier covered transactions and in all solicitations for lower tier covered transactions.

h. A participant in a covered transaction may rely upon a certification of a prospective participant in a lower tier covered transaction that is not debarred, suspended, ineligible, or voluntarily excluded from the covered transaction, unless it knows that the certification is erroneous. A participant may decide the method and frequency by which it determines the eligibility of its principals. Each participant may, but is not required to, check the nonprocurement portion of the "Lists of Parties Excluded from Federal Procurement or Nonprocurement Programs" (Nonprocurement List) which is compiled by the General Services Administration.

i. Nothing contained in the foregoing shall be construed to require establishment of a system of records in order to render in good faith the certification required by this clause. The knowledge and information of participant is not required to exceed that which is normally possessed by a prudent person in the ordinary course of business dealings.

j. Except for transactions authorized under paragraph f of these instructions, if a participant in a covered transaction knowingly enters into a lower tier covered transaction with a person who is suspended, debarred, ineligible, or voluntarily excluded from participation in this transaction, in addition to other remedies available to the Federal Government, the department or agency may terminate this transaction for cause or default.

******

Certification Regarding Debarment, Suspension, Ineligibility and Voluntary Exclusion-Primary Covered Transactions

1. The prospective primary participant certifies to the best of its knowledge and belief, that it and its principals:

a. Are not presently debarred, suspended, proposed for debarment, declared ineligible, or voluntarily excluded from covered transactions by any Federal department or agency;

b. Have not within a 3-year period preceding this proposal been convicted of or had a civil judgment rendered against them for commission of fraud or a criminal offense in connection with obtaining, attempting to obtain, or performing a public (Federal, State or local) transaction or contract under a public transaction; violation of Federal or State antitrust statutes or commission of embezzlement, theft, forgery, bribery, falsification or destruction of records, making false statements, or receiving stolen property;

c. Are not presently indicted for or otherwise criminally or civilly charged by a governmental entity (Federal, State or local) with commission of any of the offenses enumerated in paragraph 1b of this certification; and

d. Have not within a 3-year period preceding this application/proposal had one or more public transactions (Federal, State or local) terminated for cause or default.

2. Where the prospective primary participant is unable to certify to any of the statements in this certification, such prospective participant shall attach an explanation to this proposal.

******

2. Instructions for Certification - Lower Tier Covered Transactions:

(Applicable to all subcontracts, purchase orders and other lower tier transactions of $25,000 or more - 49 CFR 29)

a. By signing and submitting this proposal, the prospective lower tier is providing the certification set out below.

b. The certification in this clause is a material representation of fact upon which reliance was placed when this transaction was entered into. If it is later determined that the prospective lower tier participant knowingly rendered an erroneous certification, in addition to other remedies available to the Federal Government, the department, or agency with which this transaction originated may pursue available remedies, including suspension and/or debarment.

c. The prospective lower tier participant shall provide immediate written notice to the person to which this proposal is submitted if at any time the prospective lower tier participant learns that its certification was erroneous by reason of changed circumstances.

d. The terms "covered transaction," "debarred," "suspended," "ineligible," "primary covered transaction," "participant," "person," "principal," "proposal," and "voluntarily excluded," as used in this clause, have the meanings set out in the Definitions and Coverage sections of rules implementing Executive Order 12549. You may contact the person to which this proposal is submitted for assistance in obtaining a copy of those regulations.

e. The prospective lower tie participant agrees by submitting this proposal that, should the proposed covered transaction be entered into, it shall not knowingly enter into any lower tier covered transaction with a person who is debarred, suspended, declared ineligible, or voluntarily excluded from participation in this covered transaction, unless authorized by the department or agency with which this transaction originated.

f. The prospective lower tier participant further agrees by submitting this proposal that it will include this clause titled "Certification Regarding Debarment, Suspension, Ineligibility and Voluntary Exclusion-Lower Tier Covered Transaction," without modification, in all lower tier covered transactions and in all solicitations for lower tier covered transactions.

g. A participant in a covered transaction may rely upon a certification of a prospective participant in a lower tier covered transaction that is not debarred, suspended, ineligible, or voluntarily excluded from the covered transaction, unless it knows that the certification is erroneous. A participant may decide the method and frequency by which it determines the eligibility of its principals. Each participant may, but is not required to, check the Nonprocurement List.

h. Nothing contained in the foregoing shall be construed to require establishment of a system of records in order to render in good faith the certification required by this clause. The knowledge and information of participant is not required to exceed that which is normally possessed by a prudent person in the ordinary course of business dealing.

i. Except for transactions authorized under paragraph e of these instructions, if a participant in a covered transaction knowingly enters into a lower tier covered transaction with a person who is suspended, debarred, ineligible, or voluntarily

excluded from participation in this transaction, in addition to other remedies available to the Federal Government, the department or agency with which this transaction originated may pursue available remedies, including suspension and/or debarment.

******

Certification Regarding Debarment, Suspension, Ineligibility And Voluntary Exclusion-Lower Tier Covered Transactions:

1. The prospective lower tier participant certifies, by submission of this proposal, that neither it nor its principals is presently debarred, suspended, proposed for debarment, declared ineligible, or voluntarily excluded from participation in this transaction by any Federal department or agency.

2. Where the prospective lower tier participant is unable to certify to any of the statements in this certification, such prospective participant shall attach an explanation to this proposal.

******

XII. CERTIFICATION REGARDING USE OF CONTRACT FUNDS FOR LOBBYING

(Applicable to all Federal-aid construction contracts and to all related subcontracts which exceed $100,000 - 49 CFR 20)

1. The prospective participant certifies, by signing and submitting this bid or proposal, to the best of his or her knowledge and belief, that:

a. No Federal appropriated funds have been paid or will be paid, by or on behalf of the undersigned, to any person for influencing or attempting to influence an officer or employee of any Federal agency, a Member of Congress, an officer or employee of Congress, or an employee of a Member of Congress in connection with the awarding of any Federal contract, the making of any Federal grant, the making of any Federal loan, the entering into of any cooperative agreement, and the extension, continuation, renewal, amendment, or modification of any Federal contract, grant, loan, or cooperative agreement.

b. If any funds other than Federal appropriated funds have been paid or will be paid to any person for influencing or attempting to influence an officer or employee of any Federal agency, a Member of Congress, an officer or employee of Congress, or an employee of a Member of Congress in connection with this Federal contract, grant, loan, or cooperative agreement, the undersigned shall complete and submit Standard Form-LLL, “Disclosure Form to Report Lobbying,” in accordance with its instructions.

2. This certification is a material representation of fact upon which reliance was placed when this transaction was made or entered into. Submission of this certification is a prerequisite for making or entering into this transaction imposed by 31 U.S.C. 1352. Any person who fails to file the required certification shall be subject to a civil penalty of not less than $10,000 and not more than $100,000 for each such failure.

3. The prospective participant also agrees by submitting his or her bid or proposal that he or she shall require that the language of this certification be included in all lower tier subcontracts, which exceed $100,000 and that all such recipients shall certify and disclose accordingly.

MINIMUM WAGES FOR FEDERAL AND FEDERALLY ASSISTED CONSTRUCTION CONTRACTS

This project is funded, in part, with Federal-aid funds and, as such, is subject to the provisions of the Davis-Bacon Act of March 3, 1931, as amended (46 Sta. 1494, as amended, 40 U.S.C. 276a) and of other Federal statutes referred to in a 29 CFR Part 1, Appendix A, as well as such additional statutes as may from time to time be enacted containing provisions for the payment of wages determined to be prevailing by the Secretary of Labor in accordance with the Davis-Bacon Act and pursuant to the provisions of 29 CFR Part 1. The prevailing rates and fringe benefits shown in the General Wage Determination Decisions issued by the U.S. Department of Labor shall, in accordance with the provisions of the foregoing statutes, constitute the minimum wages payable on Federal and federally assisted construction projects to laborers and mechanics of the specified classes engaged on contract work of the character and in the localities described therein.

General Wage Determination Decisions, modifications and supersedes decisions thereto are to be used in accordance with the provisions of 29 CFR Parts 1 and 5. Accordingly, the applicable decision, together with any modifications issued, must be made a part of every contract for performance of the described work within the geographic area indicated as required by an applicable DBRA Federal prevailing wage law and 29 CFR Part 5. The wage rates and fringe benefits contained in the General Wage Determination Decision

NOTICE

The most current **General Wage Determination Decisions** (wage rates) are available on the IDOT web site. They are located on the Letting and Bidding page at http://www.dot.state.il.us/desenv/delett.html.

In addition, ten (10) days prior to the letting, the applicable Federal wage rates will be e-mailed to subscribers. It is recommended that all contractors subscribe to the Federal Wage Rates List or the Contractor's Packet through IDOT's subscription service.

PLEASE NOTE: if you have already subscribed to the Contractor's Packet you will automatically receive the Federal Wage Rates.

The instructions for subscribing are at http://www.dot.state.il.us/desenv/subsc.html.

If you have any questions concerning the wage rates, please contact IDOT's Chief Contract Official at 217-782-7806.