STATE OF ILLINOIS
DEPARTMENT OF PUBLIC WORKS & BUILDINGS
DIVISION OF HIGHWAYS

SHEET 23 OF 23 SHEET NO. 1 1 SHEET
D-9 CONT. MAINT. FY 04-11

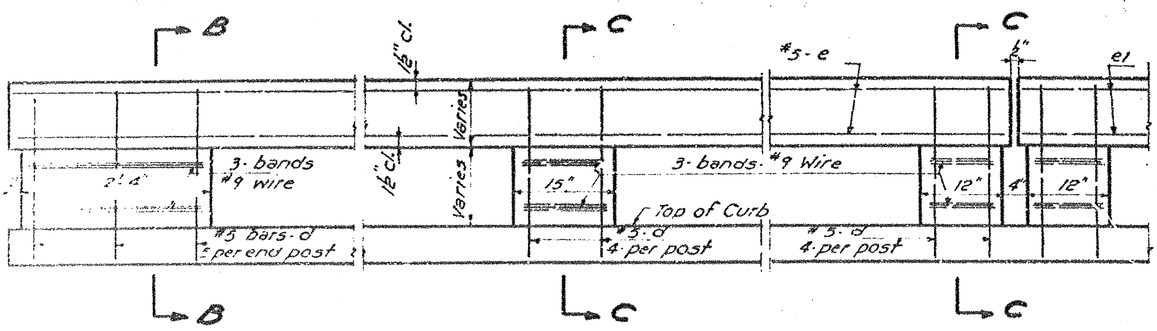

INSIDE ELEVATION OF RAIL

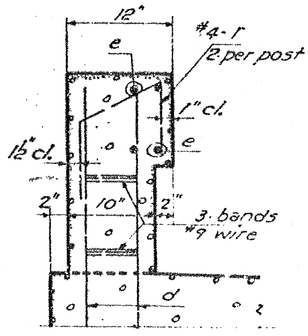

SECTION B-B

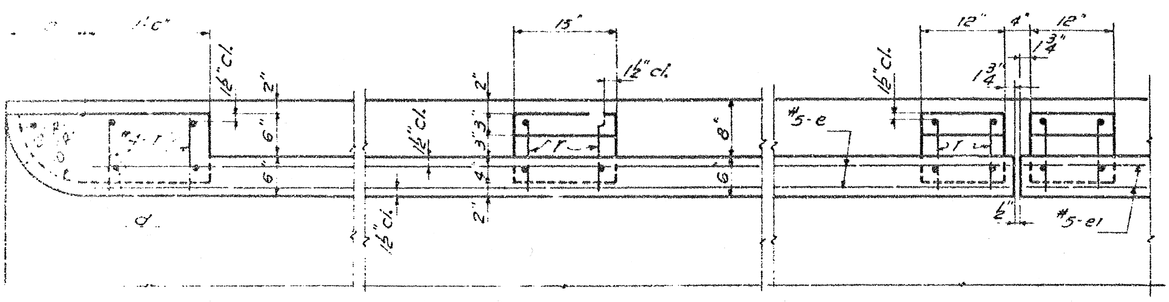

PLAN OF RAIL

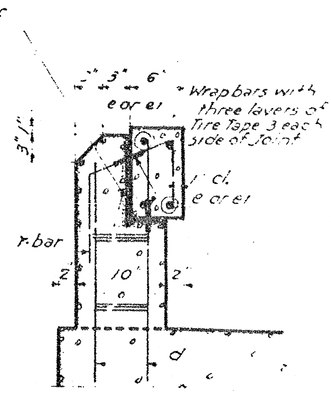

SECTION C-C

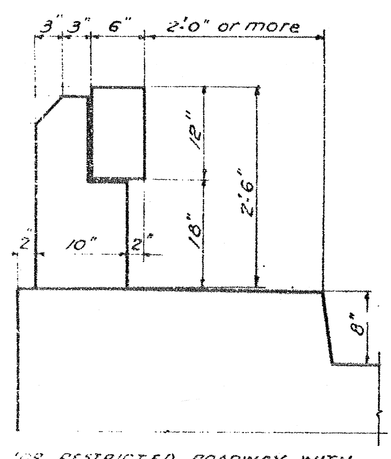

FOR RESTRICTED ROADWAY WITH CURB WIDTH OF 2'-0" OR MORE

TYPE 3A

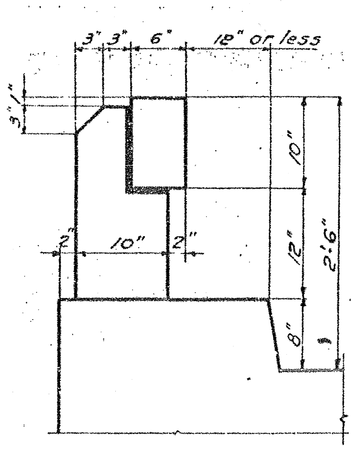

FOR RESTRICTED ROADWAY WITH CURB WIDTH OF 12" OR LESS

TYPE 3B

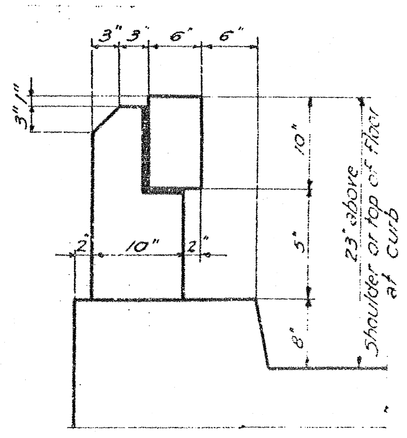

FOR SHOULDER WIDTH ROADWAY WITH 6" CURB WIDTH

TYPE 3C

NOTE
Cost of #9 wire shall be included in the contract unit price for Handrail Concrete.
See Bridge Plans for spacing of Posts.
Use double post and ½" open joint only where called for on Bridge Plans.

STANDARD	COMPUTED	EXAMINED	OCT. 5 1959
	CHECKED		BRIDGE ENGINEER
	DRAWN M. MILLER	PASSED	ENGINEER OF DESIGN
SPECIAL	CHECKED	APPROVED	CHIEF HIGHWAY ENGINEER
	ASSEMBLED		
	CHECKED		

FOR INFORMATION ONLY

DETAILS OF REINFORCED CONCRETE HANDRAIL TYPES 3A-3B & 3C

Re-Drawn - Sept. 2, 1954 Sign's. Rev. Nov. 58

STANDARD 2070-R

23 of 23
98847