ROUTE NO.	SECTION	COUNTY	TOTAL SHEETS	SHEET NO.
F.A.P. 132	*	POPE	23	18
FED. ROAD DIST. NO. 7	ILLINOIS	PROJECT-		

*D-9 CONT. MAINT. FY 04-11 98847

STATE OF ILLINOIS
DEPARTMENT OF TRANSPORTATION

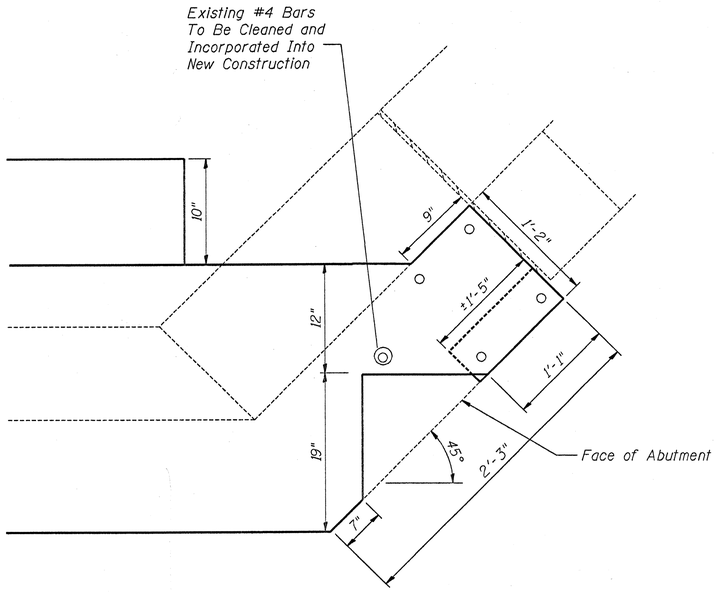

CORNER DETAIL

Work this sheet with Sheets 17, 19 and 20 of 23 for reinforcement details.

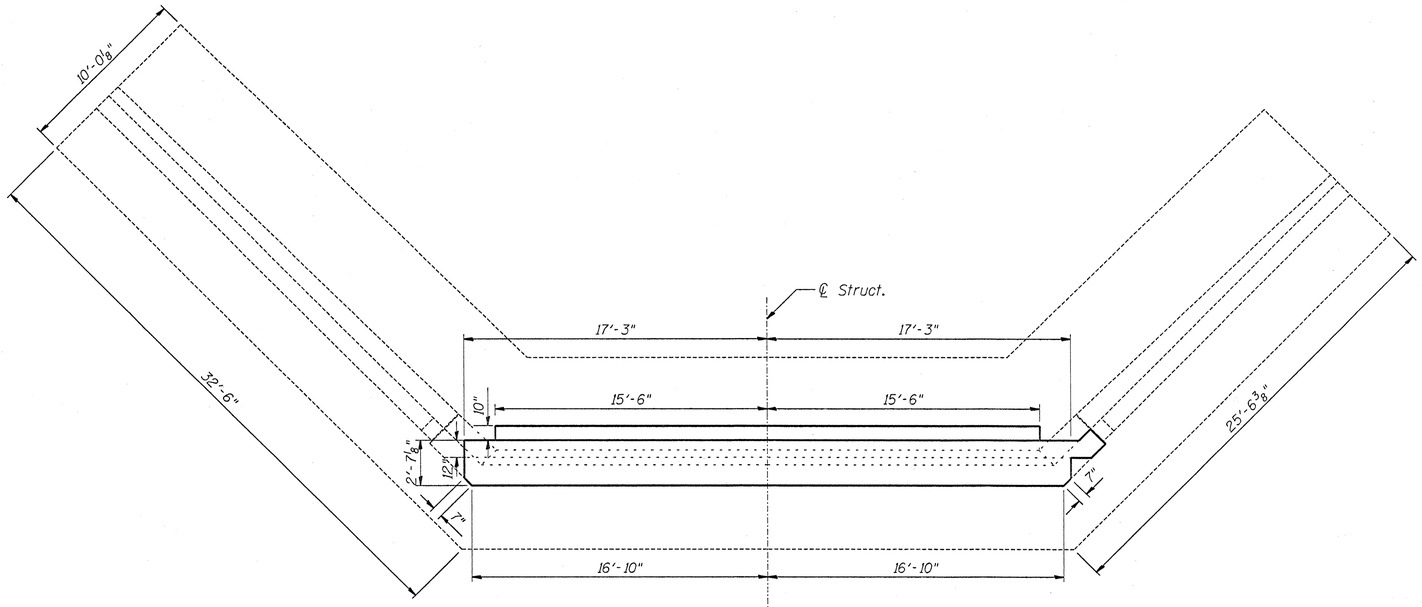

PLAN

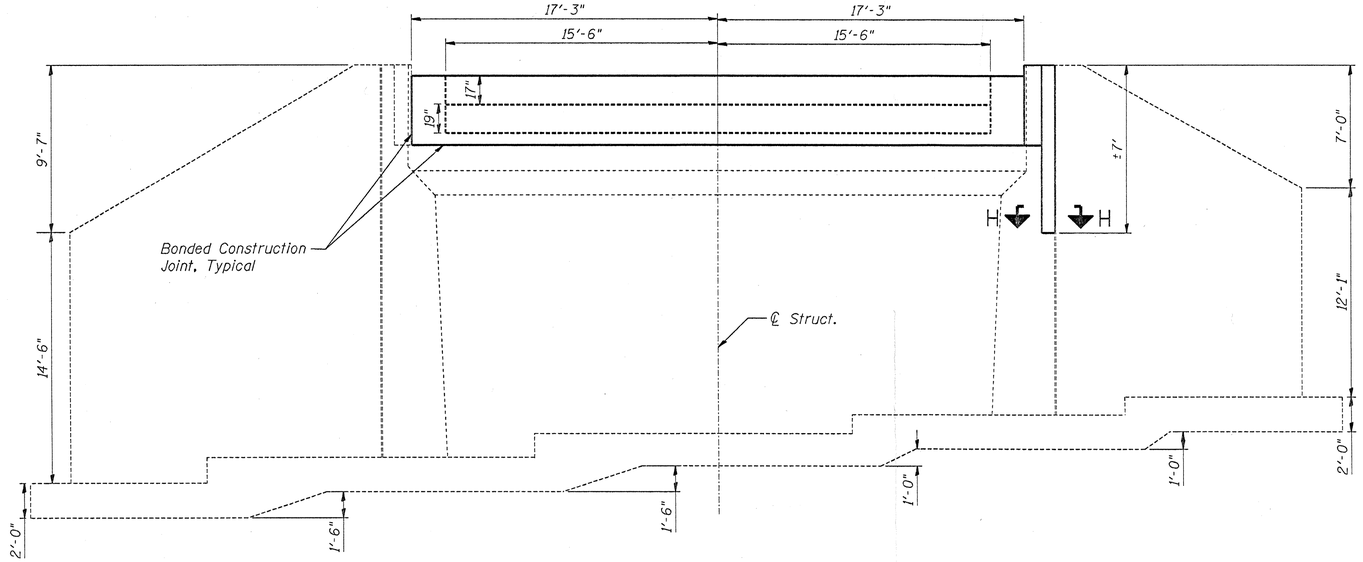

NORTH ABUTMENT ELEVATION - CONCRETE SUPERSTRUCTURE

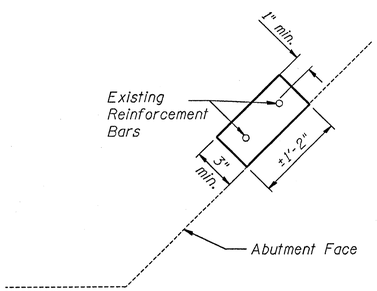

SECTION H-H

DESIGNED	RKG
CHECKED	CNT
DRAWN	RKG
CHECKED	CNT