ROUTE NO.	SECTION	COUNTY	TOTAL SHEETS	SHEET NO.
F.A.P. 132	*	POPE	23	17
FED. ROAD DIST. NO. 7	ILLINOIS	PROJECT-		

D-9 CONT. MAINT. FY 04-11 98847

STATE OF ILLINOIS
DEPARTMENT OF TRANSPORTATION

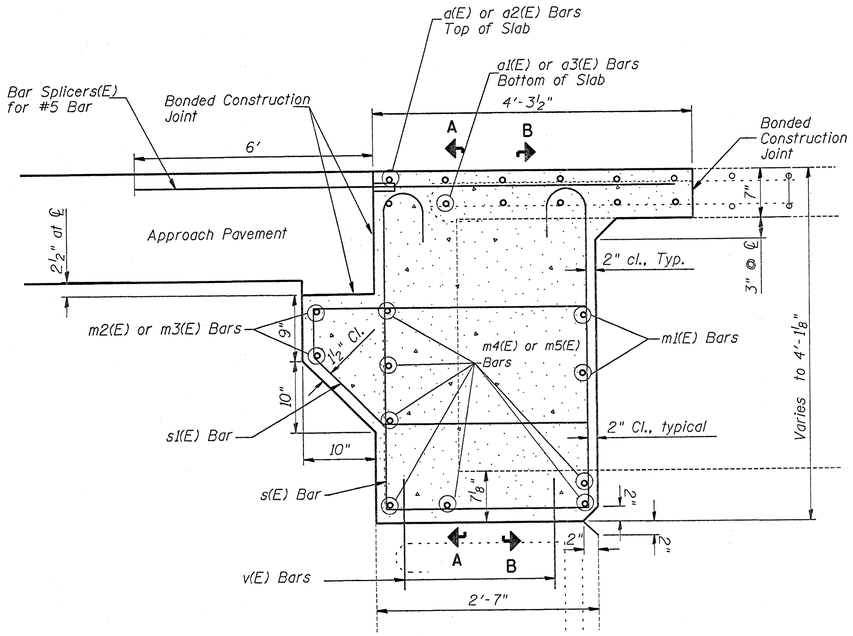

SECTION BETWEEN BEAMS - NORTH ABUTMENT

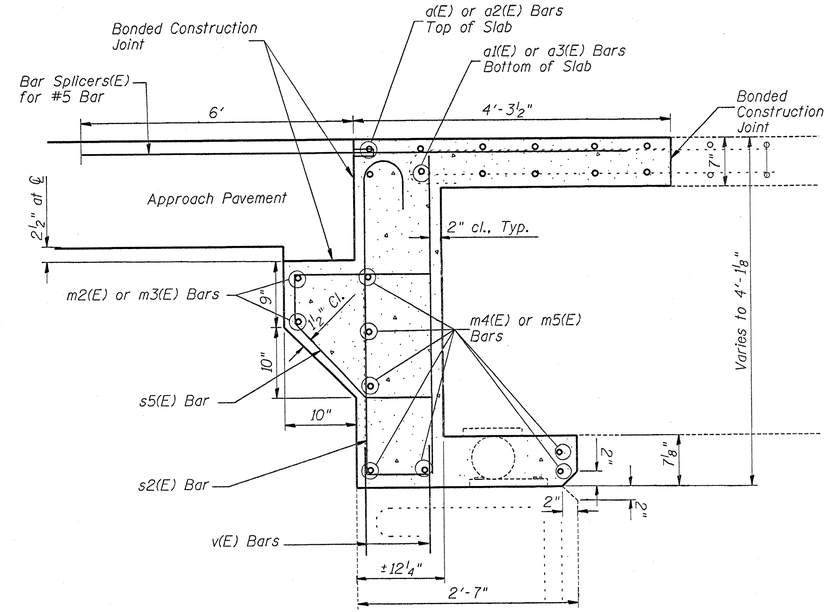

SECTION THRU BEAM - NORTH ABUTMENT

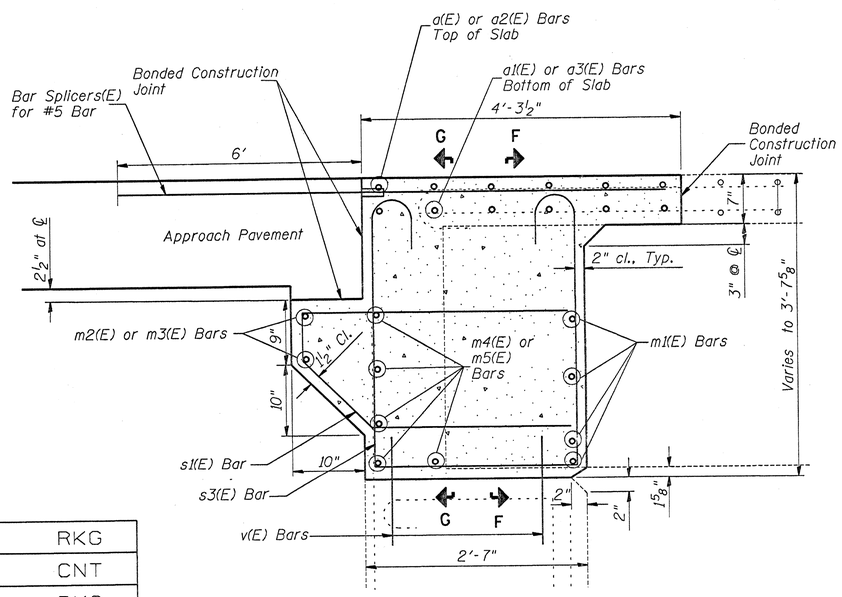

SECTION BETWEEN BEAMS - SOUTH ABUTMENT

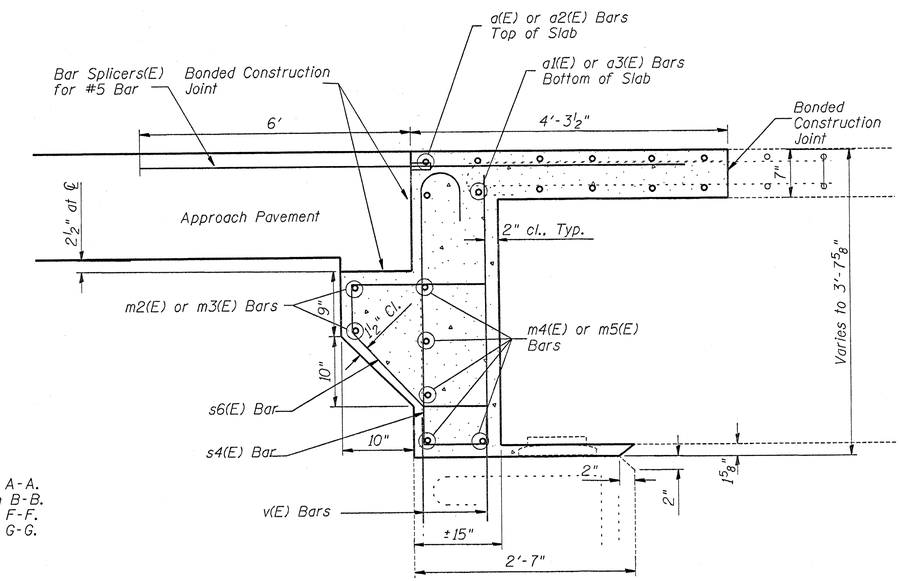

SECTION THRU BEAM - SOUTH ABUTMENT

Note:
All bearings to remain in place.

See Sheet 19 of 23 for Section A-A.
See Sheet 20 of 23 for Section B-B.
See Sheet 15 of 23 for Section F-F.
See Sheet 16 of 23 for Section G-G.

DESIGNED	RKG
CHECKED	CNT
DRAWN	RKG
CHECKED	CNT