ROUTE NO.	SECTION	COUNTY	TOTAL SHEETS	SHEET NO.
F.A.P. 132	*	POPE	23	13
FED. ROAD DIST. NO. 7	ILLINOIS	PROJECT-		

*D-9 CONT. MAINT. FY 04-11 98847

STATE OF ILLINOIS
DEPARTMENT OF TRANSPORTATION

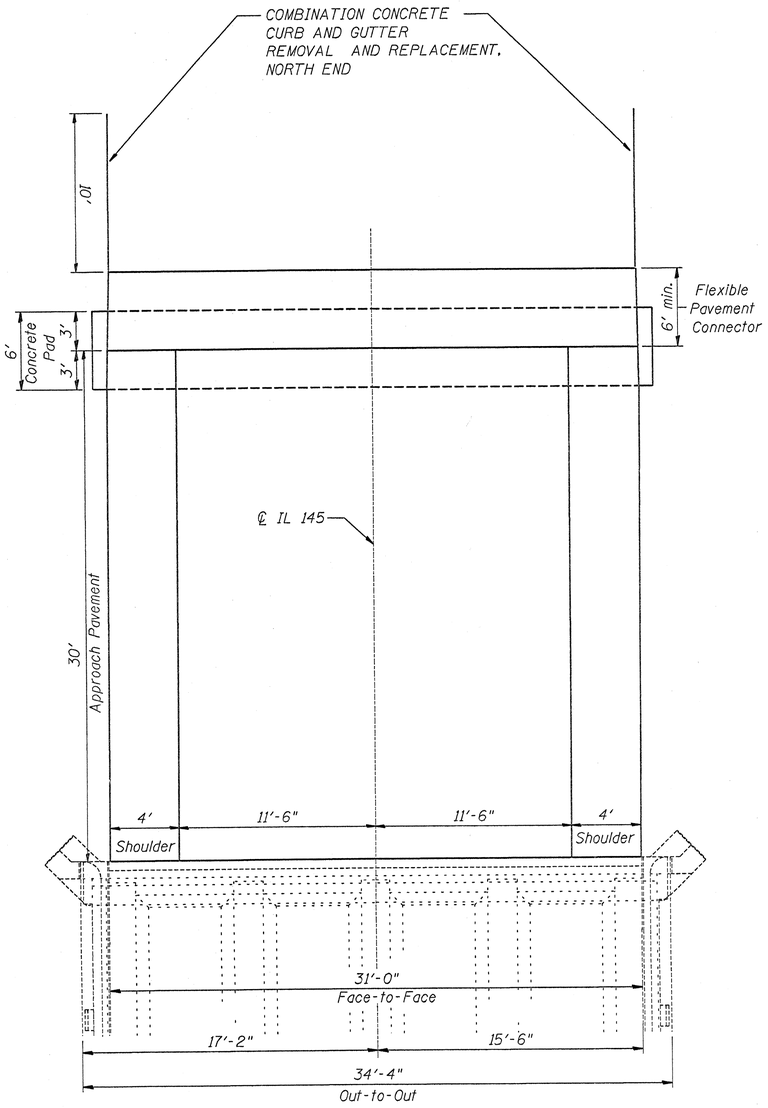

TYPICAL APPROACH

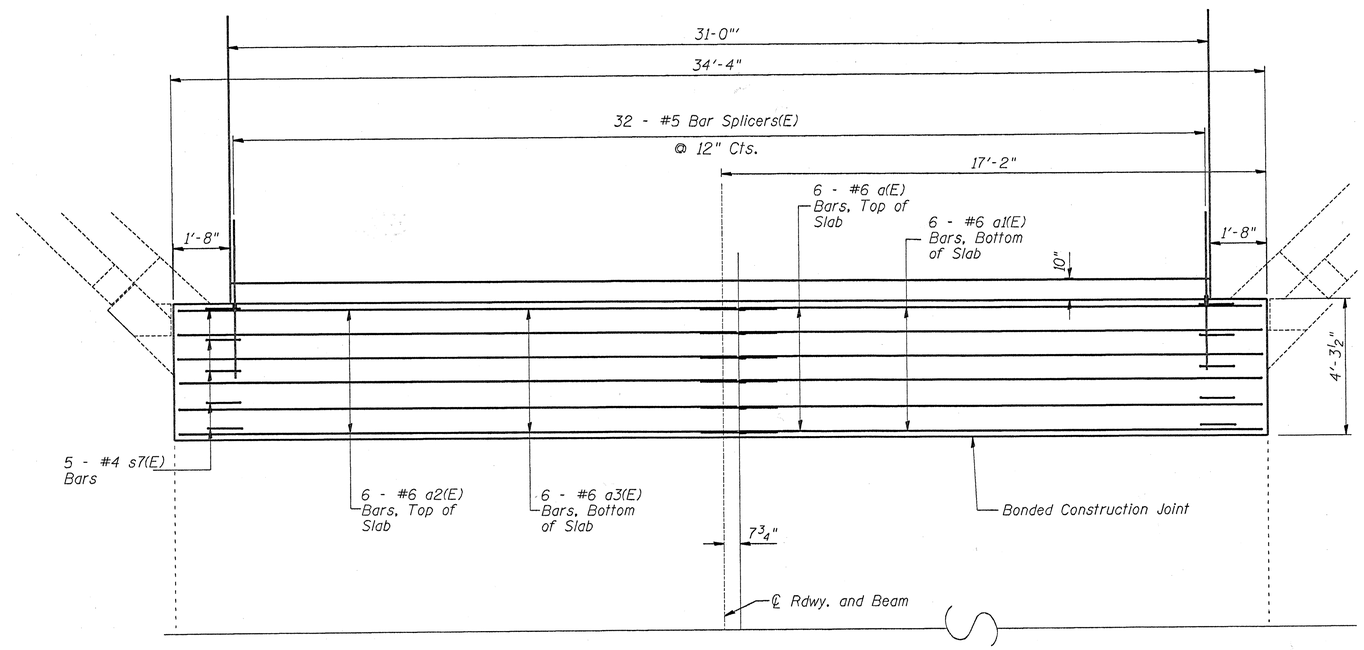

HALF PLAN - DECK SLAB
SYMMETRIC BY 180° ROTATION
(LOOKING SOUTH)

NOTES:

Approach pavement shall be constructed according to Standard 420401, except no curb shall be constructed.

Where new pavement meets existing pavement, new pavement shall match the slope and width of existing pavement.

Work this sheet with Sheets 12 and 17 of 23.

Minimum Bar Lap #6 Bar = 2'-9".

DESIGNED	RKG
CHECKED	CNT
DRAWN	RKG
CHECKED	CNT