ROUTE NO.	SECTION	COUNTY	TOTAL SHEETS	SHEET NO.
F.A.P. 132	*	POPE	23	11
FED. ROAD DIST. NO. 7	ILLINOIS	PROJECT-		

*D-9 CONT. MAINT. FY 04-11 98847

STATE OF ILLINOIS
DEPARTMENT OF TRANSPORTATION

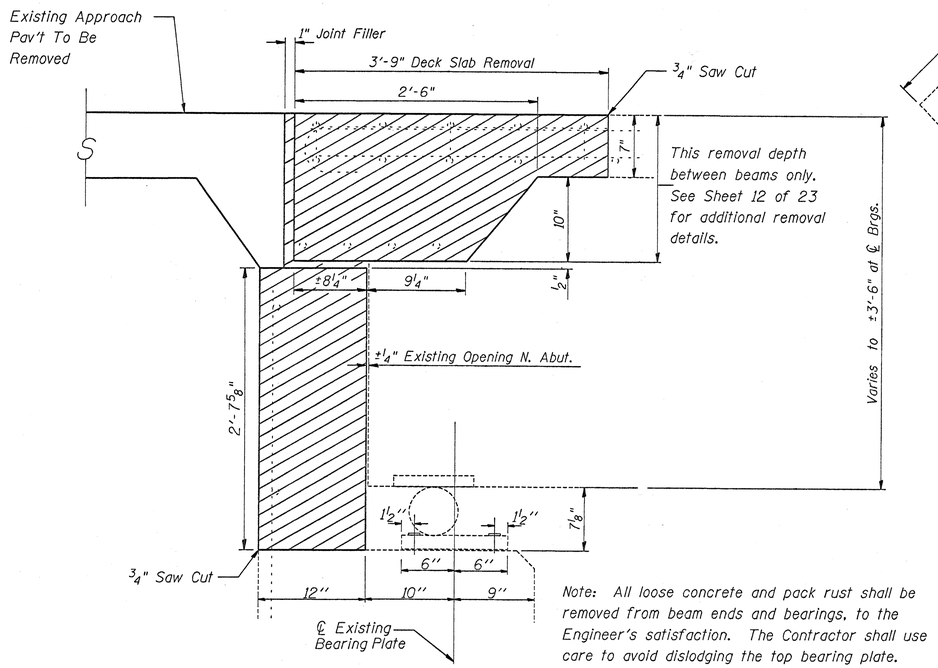

Note: All loose concrete and pack rust shall be removed from beam ends and bearings, to the Engineer's satisfaction. The Contractor shall use care to avoid dislodging the top bearing plate.

SECTION D-D

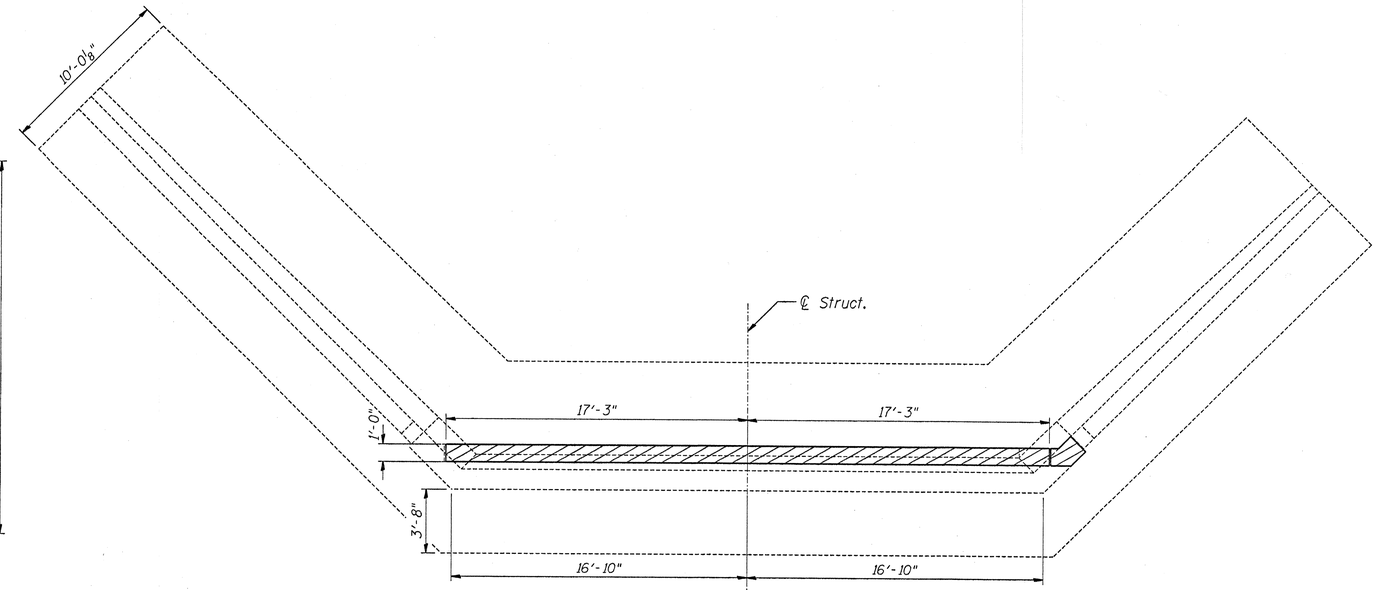

PLAN

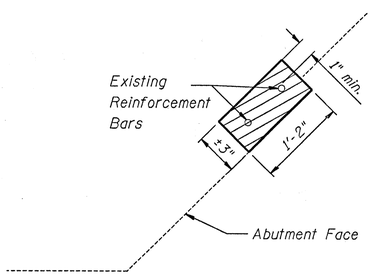

SECTION E-E

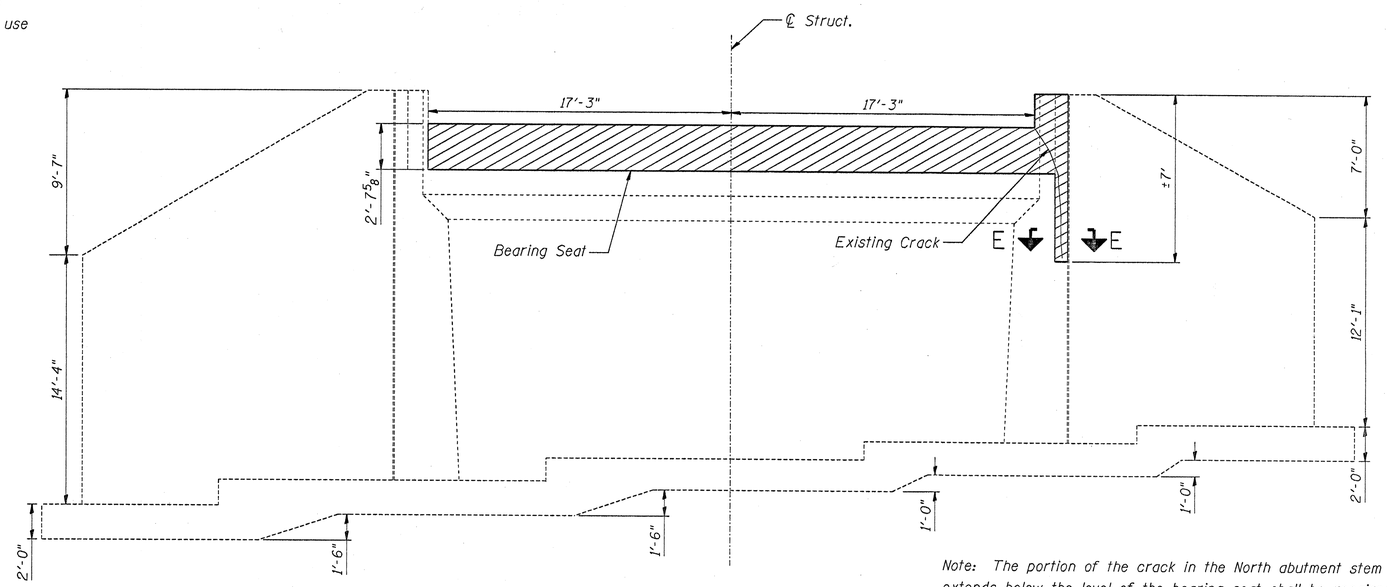

Note: The portion of the crack in the North abutment stem which extends below the level of the bearing seat shall be repaired according to the special provision "Formed Concrete Repair". This work will not be paid for separately, but will be included in payment for Concrete Removal and Concrete Superstructure.

NORTH ABUTMENT ELEVATION
CONCRETE REMOVAL

CONCRETE REMOVAL

DESIGNED	RKG
CHECKED	CNT
DRAWN	RKG
CHECKED	CNT