FAS RTE	SECTION	COUNTY	TOTAL SHEETS	SHEET NO
939	•	PULASKI	29	6
STA. 66+18		TO STA. 92+00		
FED. ROAD DIST. NO.		ILLINOIS	FED. AID PROJECT	

• D-9 CONT MAINT FY 04-1 0098814

TYPICAL SECTION #3

FAS 939

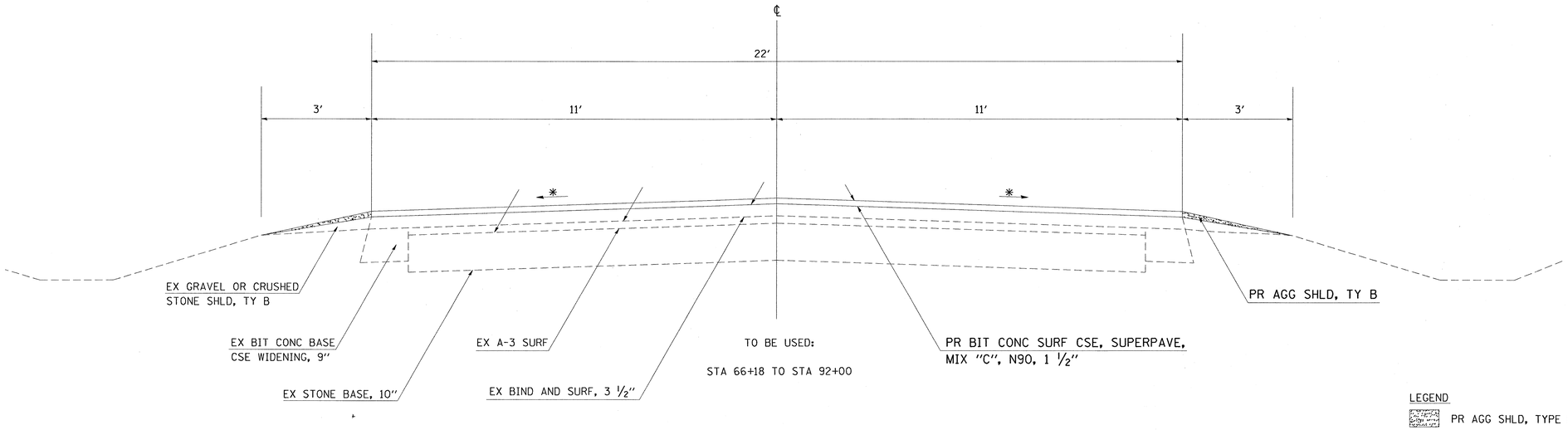

LEGEND

PR AGG SHLD, TYPE B

✱MATCH EXISTING SLOPE

Tue Dec 9 07:48:42 2003
c:\projects\d903003\d903003pl.m32 LV=2-63