FAS RTE	SECTION	COUNTY	TOTAL SHEETS	SHEET NO
939	•	PULASKI	29	5
STA. 64+38		TO STA. 66+18		
FED. ROAD DIST. NO.		ILLINOIS	FED. AID PROJECT	

• D-9 CONT MAINT FY 04-1 0098811

TYPICAL SECTION #1

FAS 939

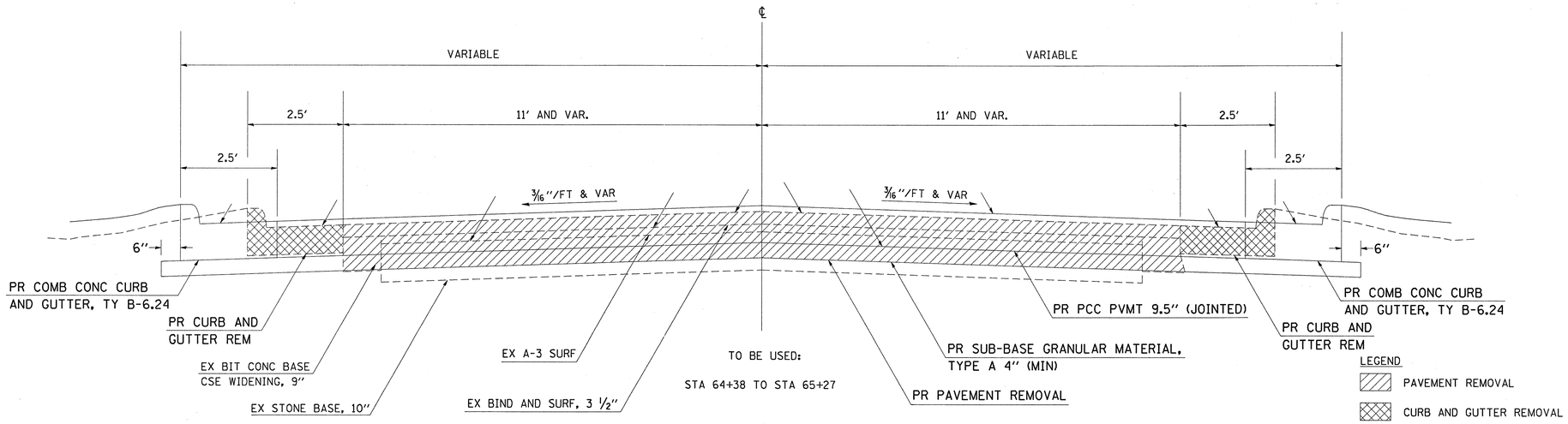

TYPICAL SECTION #2

FAS 939

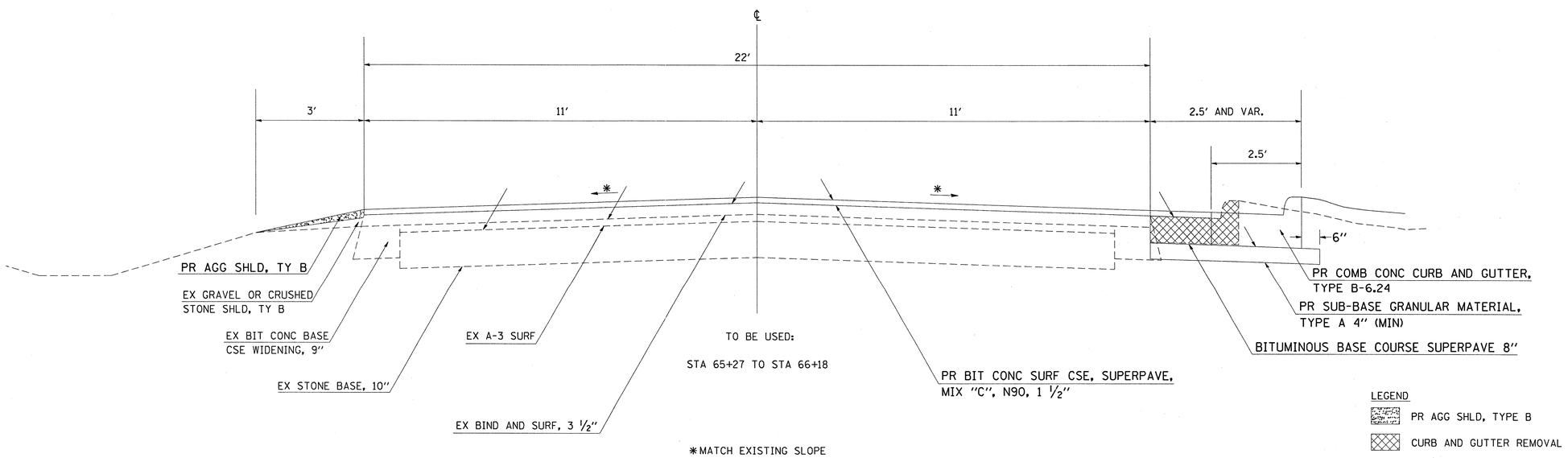

Wed Dec 17 10:26:56 2003
G:\projects\d903003\d903003plan32 LV=2-63

TYPICAL SECTIONS