STATE OF ILLINOIS
DEPARTMENT OF TRANSPORTATION

ROUTE NO.	SECTION	COUNTY	TOTAL SHEETS	SHEET NO.
FAP 885	5B-1	HARDIN		38
FED. ROAD DIST. NO. 7		ILLINOIS	FED. AID PROJECT-	

SHEET NO. 12
34 SHEETS
98648

INTERIOR GIRDER MOMENT TABLE		0.4 Sp. 1 or 0.6 Sp. 3	Pier 1 or Pier 2	0.5 Sp. 2
Is	(in⁴)	18677	42087	17765
Ic(n)	(in⁴)	46753	-	43922
Ic (3n)	(in⁴)	34064	-	32223
Ss	(in³)	768	1544	710
Sc(n)	(in³)	1082	-	1006
Sc(3n)	(in³)	981	-	911
wℓ	(K/ft.)	0.822	1.440	0.816
Mℓ	('K)	659	2511	528
sℓ	(K/ft.)	0.483	-	0.483
Msℓ	('K)	451	-	472
Mℓ	('K)	909	980	933
M (Imp)	('K)	189	191	173
$\frac{5}{3}$[(Mℓ+(Imp)]	('K)	1830	1951	1842
Ma	('K)	3821	5801	3694
* Mu	('K)	4352	-	4477
fsℓ non-comp	(k.s.i.)	10.3	19.5	8.9
fsℓ (comp)	(k.s.i.)	5.5		6.2
fs$\frac{5}{3}$(ℓ+Imp)	(k.s.i.)	20.3	15.2	22.0
fs (Overload)	(k.s.i.)	36.1	34.7	37.1
** fs (Total)	(k.s.i.)	-	45.1	-
VR	(K)	53.2	-	45.7

INTERIOR GIRDER REACTION TABLE		Abutment	Piers
Rℓ	(K)	54.2	198.2
Rℓ	(K)	39.4	75.4
Imp.	(K)	8.2	14.8
R (Total)	(K)	101.8	288.4

Is and Ss are the moment of inertia and section modulus of the steel section used in computing fs (Total & Overload).

Ic(n) and Sc(n) are the moment of inertia and section modulus of the composite section used in computing stresses due to Live Load.

Ic(3n) and Sc(3n) are the moment of inertia and section modulus of the composite section used in computing stresses due to superimposed dead loads. (see AASHTO 10.38)

Ma (Applied Moment)=1.3[Mℓ + Msℓ + $\frac{5}{3}$(Mℓ + M Imp)].

fs (Overload) is the sum of the stresses due to Mℓ + Msℓ + $\frac{5}{3}$(Mℓ + M(Imp)).

fs (Total) (Non-compact section) is the sum of the stresses due to 1.3[Mℓ + Msℓ + $\frac{5}{3}$(Mℓ + M Imp)].

The Plastic Moment capacity (M_u) is computed according to AASHTO 10.48.1 & 10.50.1.1.

Mℓ -Moment due to dead loads on non-composite section.

Msℓ -Moment due to dead loads on composite section.

Mℓ -Moment due to live load on non-composite or composite section.

M(Imp)-Moment due to live load impact on non-composite or composite section.

VR is the maximum live load + impact shear range in span.

* Compact, braced section.
** Noncompact section

***TOP OF WEB ELEVATIONS

Location	Girder 1	Girder 2	Girder 3	Girder 4	Girder 5	Girder 6
℄ Brg. W. Abut.	361.31	361.44	361.54	361.54	361.44	361.31
℄ Splice #1	361.54	361.67	361.77	361.77	361.67	361.54
℄ Brg. Pier 1	361.53	361.66	361.76	361.76	361.66	361.53
℄ Splice #2	361.74	361.86	361.97	361.97	361.86	361.74
℄ Splice #3	361.98	362.11	362.21	362.21	362.11	361.98
℄ Brg. Pier 2	361.98	362.11	362.22	362.22	362.11	361.98
℄ Splice #4	362.19	362.32	362.42	362.42	362.32	362.19
℄ Brg. E. Abut.	362.48	362.61	362.71	362.71	362.61	362.48

***For Fabrication only.

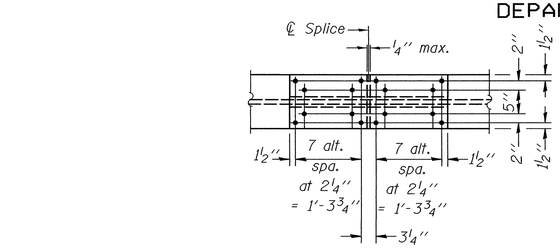

PLAN

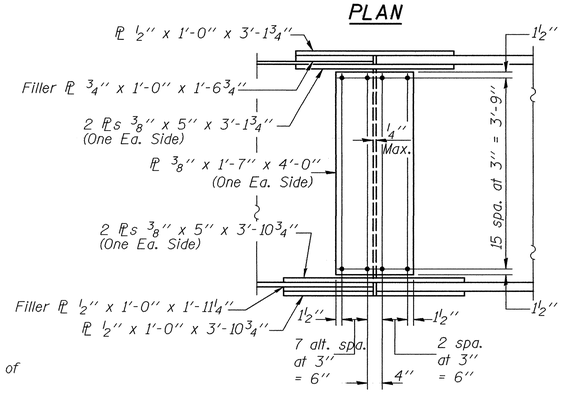

ELEVATION

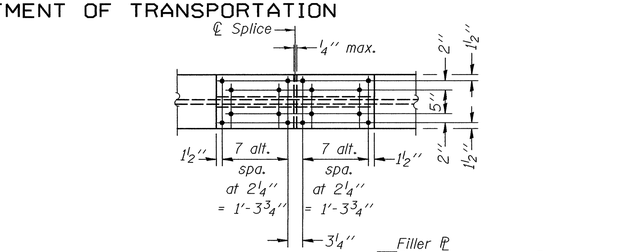

PLAN

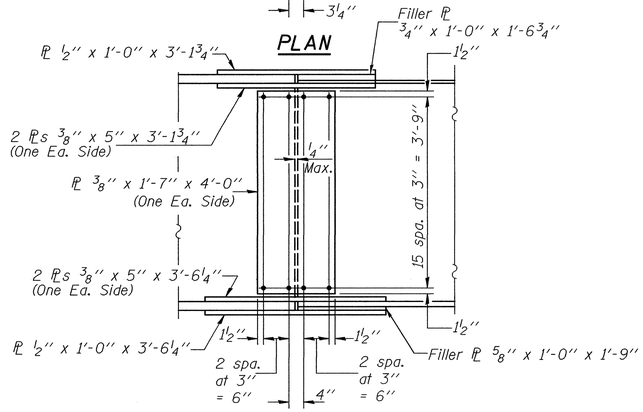

ELEVATION

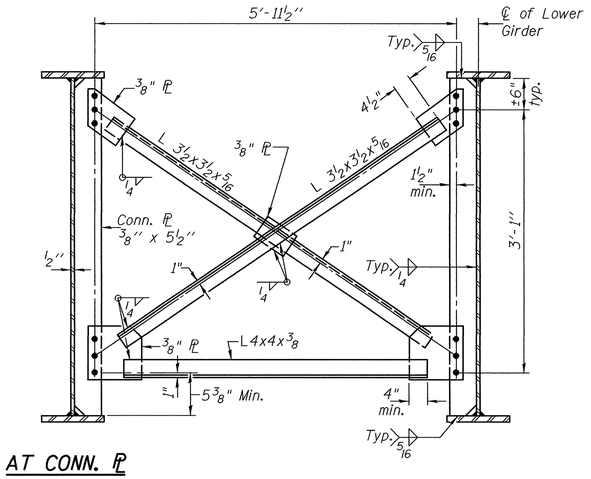

AT CONN. PL

CROSS FRAME CF

Use 3/4" ϕ H.S. Bolts with 15/16" ϕ holes in Cross Frames.
Two hardened washers shall be required over all oversized holes.
(85 Required)

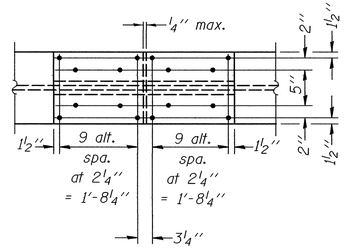

BOTTOM FLANGE
SPLICE 1 & 4

(Splice 1 shown, Splice 4 similar)

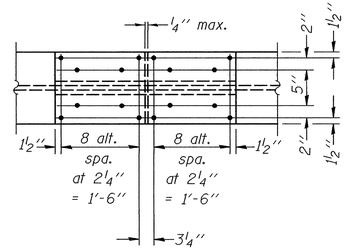

BOTTOM FLANGE
SPLICE 2 & 3

(Splice 2 shown, Splice 3 similar)

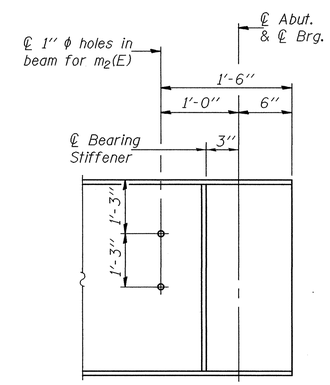

TYP. END OF BEAM ELEVATION

Notes:
All splice plates except filler plates shall be AASHTO M270 Gr. 50.
Notch Toughness Requirements are applicable for all splice plates except fill plates.
All bolts for splices are 7/8" ϕ H.S., open holes 15/16".

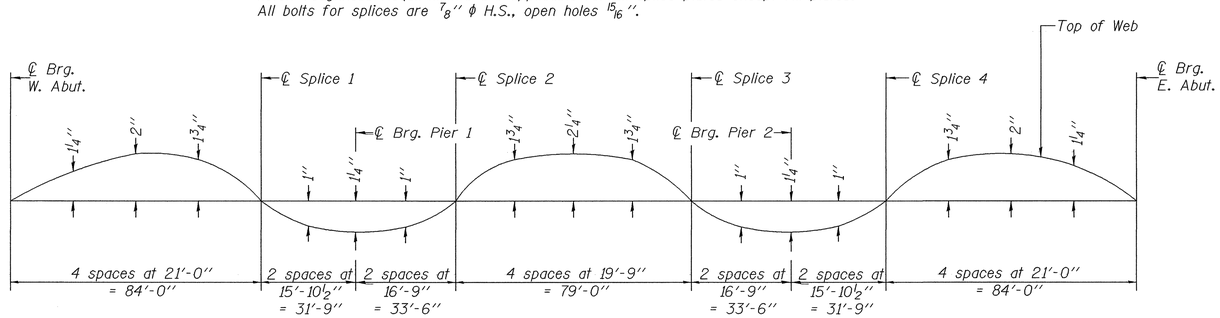

CAMBER DIAGRAM

DESIGNED	T.L.K.
CHECKED	J.E.K.
DRAWN	BECKY M. CURRY
CHECKED	T.L.K. & T.R.B.

January 15, 2004
EXAMINED Thomas J. Domagalski
ENGINEER OF BRIDGE DESIGN
PASSED Ralph E. Anderson
ENGINEER OF BRIDGES AND STRUCTURES

STRUCTURAL STEEL
F.A.P. ROUTE 885 - SECTION 5B-1
HARDIN COUNTY
STATION 280+80.00
STRUCTURE NO. 035-0014

...\projects\bmc00029\0350014.dgn 1/15/2004 2:11:34 PM