ROUTE NO.	SECTION	COUNTY	TOTAL SHEETS	SHEET NO.
FAP 885	5B-1	HARDIN		34
FED. ROAD DIST. NO. 7		ILLINOIS	FED. AID PROJECT-	

SHEET NO. 8
34 SHEETS
98648

STATE OF ILLINOIS
DEPARTMENT OF TRANSPORTATION

MIN. BAR LAP

#4 bar = 1'-4"
#5 bar = 1'-8"
#8 bar = 3'-5"

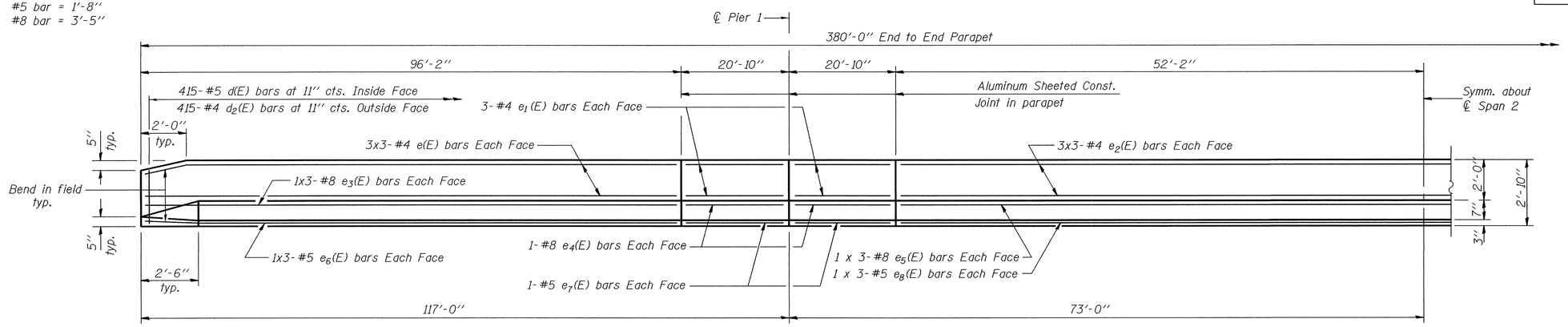

INSIDE ELEVATION OF PARAPET

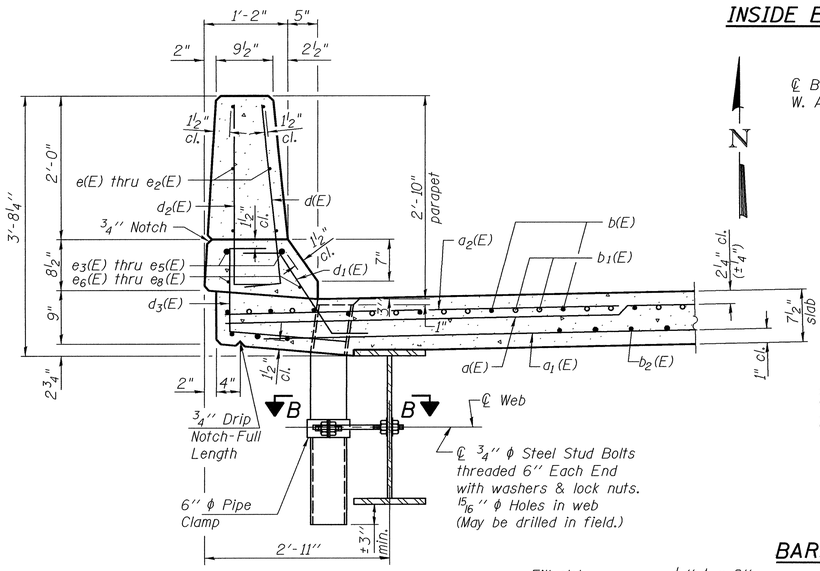

SECTION THRU PARAPET

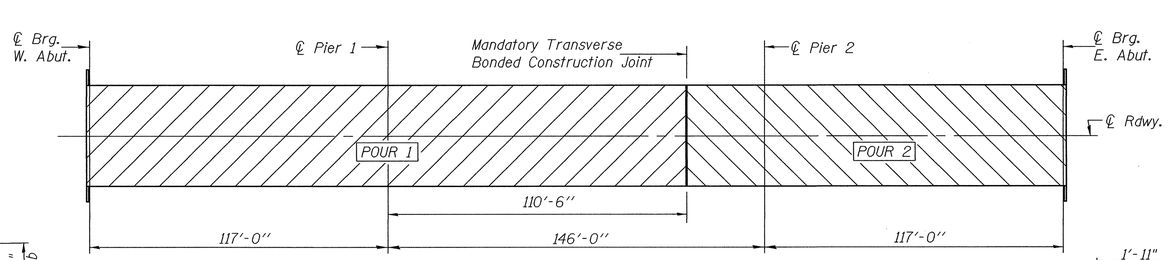

DECK POURING SEQUENCE

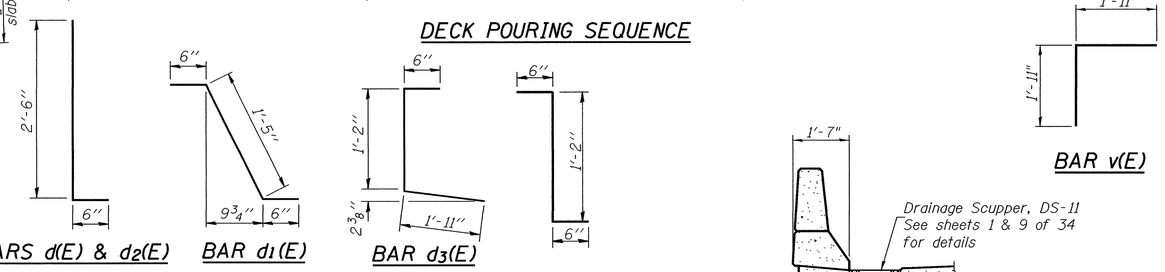

BARS d(E) & d2(E)
BAR d1(E)
BAR d3(E)
BAR d4(E)
BAR v(E)

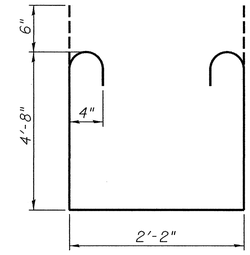

BAR s1(E)

SUPERSTRUCTURE BILL OF MATERIAL

Bar	No.	Size	Length	Shape
d(E)	652	#5	38'-10"	
a1(E)	507	#5	37'-2"	
a2(E)	652	#6	4'-6"	
a3(E)	32	#5	1'-6"	
b(E)	504	#5	33'-8"	
b1(E)	234	#6	27'-7"	
b2(E)	468	#5	31'-3"	
d(E)	830	#5	3'-0"	
d1(E)	818	#5	2'-5"	
d2(E)	830	#4	3'-0"	
d3(E)	830	#4	3'-7"	
d4(E)	12	#5	2'-2"	
e(E)	72	#4	32'-10"	
e1(E)	48	#4	20'-6"	
e2(E)	36	#4	35'-7"	
e3(E)	24	#8	34'-3"	
e4(E)	16	#8	20'-6"	
e5(E)	12	#8	37'-0"	
e6(E)	24	#5	33'-1"	
e7(E)	16	#5	20'-6"	
e8(E)	12	#5	35'-10"	
m(E)	4	#6	37'-4"	
m1(E)	6	#6	38'-10"	
m2(E)	24	#6	8'-8"	
m3(E)	10	#6	6'-4"	
m4(E)	4	#6	2'-7"	
s(E)	82	#5	4'-9"	
s1(E)	72	#4	12'-6"	
v(E)	76	#5	3'-10"	
Reinforcement Bars, Epoxy Coated			Pound	112,780
Concrete Superstructure			Cu. Yds.	474.4

Reinforcement bars designated (E) shall be epoxy coated.
Bars indicated thus 1 x 2-#5 etc. indicates 1 line of bars with 2 lengths per line.

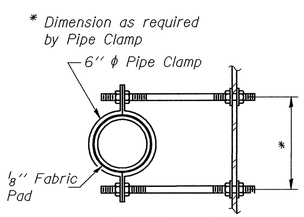

SECTION B-B

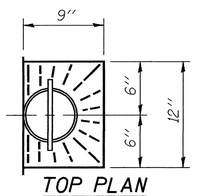

TOP PLAN

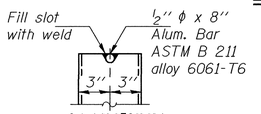

ALUMINUM TUBE

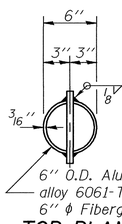

TOP PLAN
(Showing Aluminum Tube)

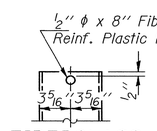

FIBERGLASS PIPE

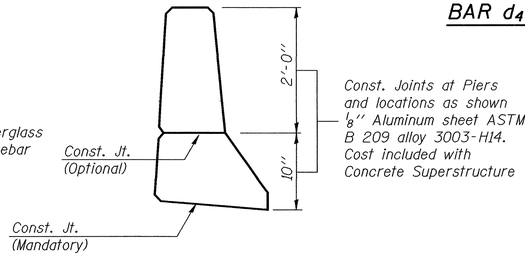

PARAPET JOINT DETAILS

Notes:
The exterior surfaces of the floor drains shall be painted with the finish coat as specified in the special provisions for Cleaning and Painting New Metal Structures. The exterior surfaces of the drains shall be cleaned according to Steel Structures Painting Council's Spec. SSPC-SP1 prior to painting. Fiberglass pipe shall conform to ASTM D 2996, with short-time rupture strength hoop tensile stress of 30,000 p.s.i. minimum.

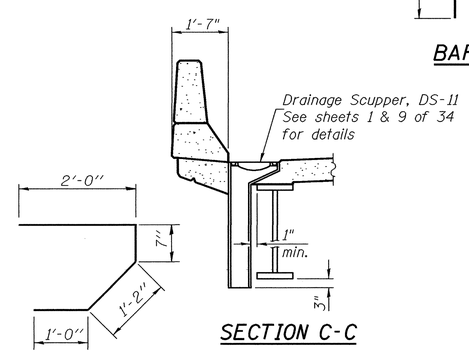

BAR s(E)
SECTION C-C

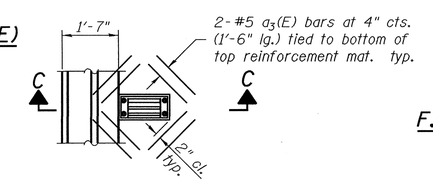

PLAN

DESIGNED	T.L.K.
CHECKED	J.E.K.
DRAWN	BECKY M. CURRY
CHECKED	T.L.K. & T.R.B.

January 15, 2004
EXAMINED Thomas J. Domagalski
ENGINEER OF BRIDGE DESIGN
PASSED Ralph E. Anderson
ENGINEER OF BRIDGES AND STRUCTURES

SUPERSTRUCTURE DETAILS
F.A.P. ROUTE 885 - SECTION 5B-1
HARDIN COUNTY
STATION 280+80.00
STRUCTURE NO. 035-0014

...\projects\bmc00029\0350014.dgn 1/15/2004 2:11:32 PM