97229

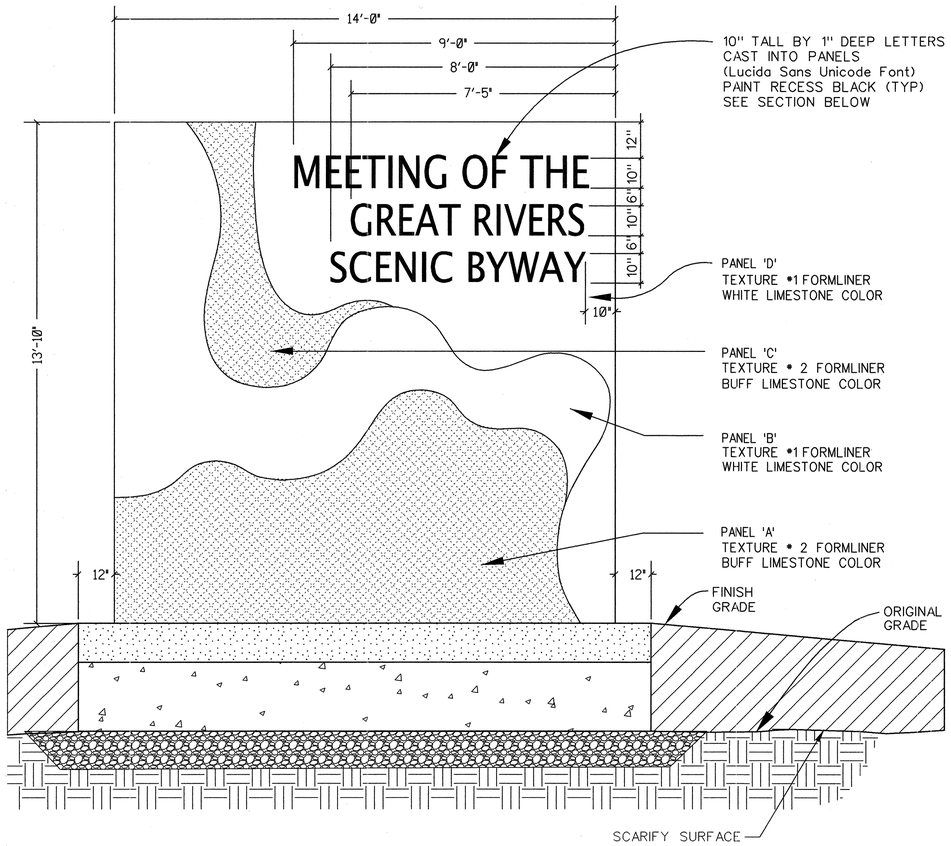

1 FRONT ELEVATION - MONUMENT

Not To Scale

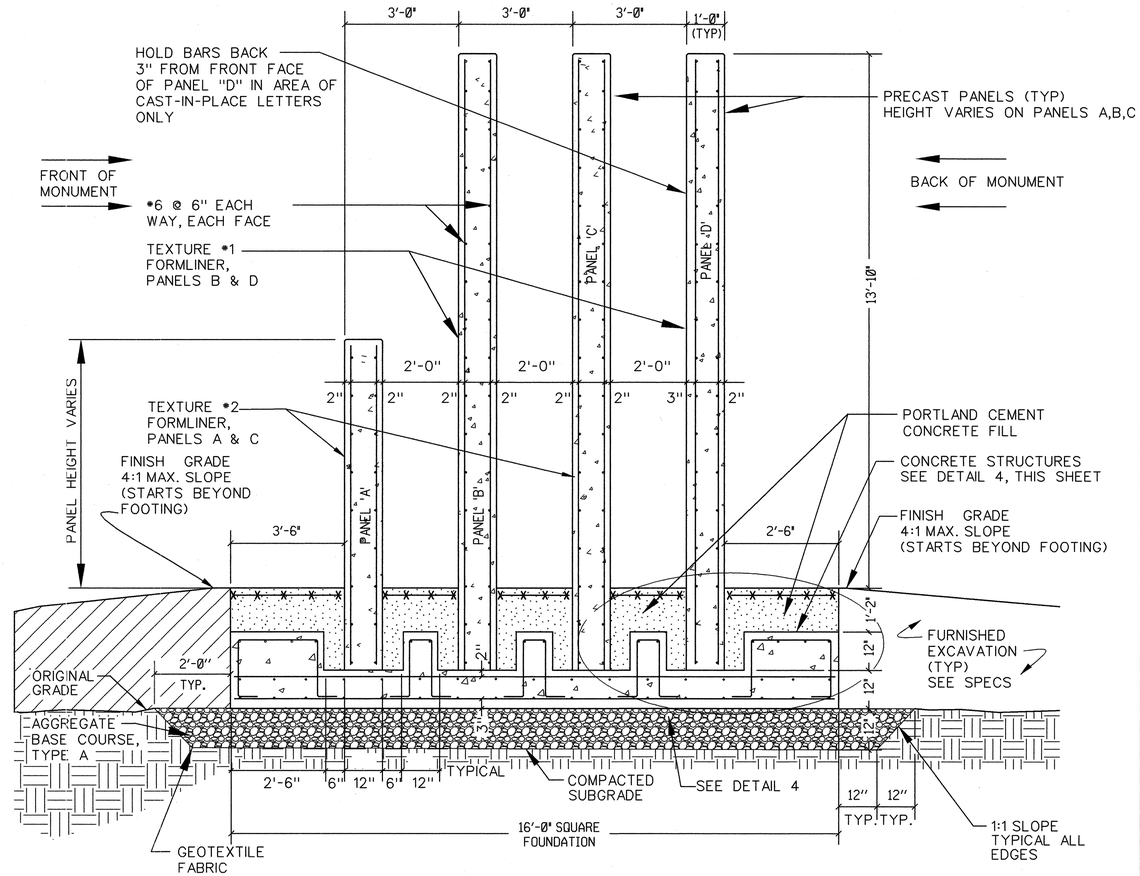

2 SECTION - MONUMENT

Not To Scale

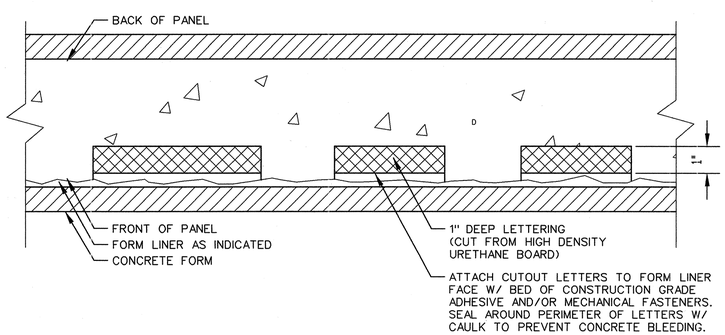

3 CAST-IN-PLACE LETTER DETAIL

Not To Scale

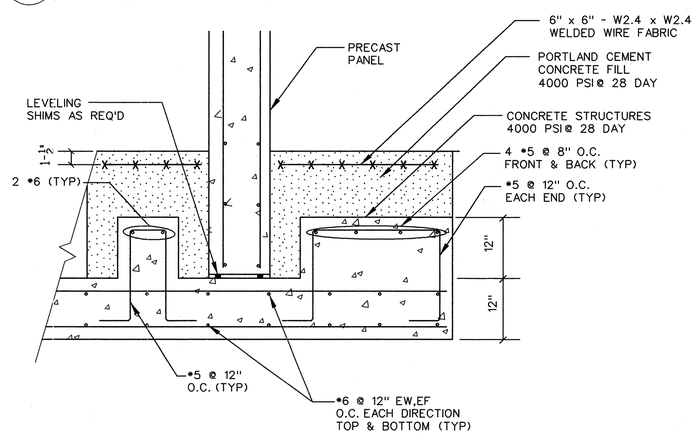

4 ENLARGED SECTION

Not To Scale

PANEL SURFACE TREATMENTS

1. FRONT FACE & LEFT VERTICAL SIDE OF PANEL TO RECEIVE SURFACE TEXTURE ONLY - RIGHT SIDE AND TOP TO BE SMOOTH FORM / TROWELED FINISH ARCHITECTURAL CONCRETE SURFACE.

2. ALL EXPOSED PANEL SURFACES TO RECEIVE COLOR SYSTEM TREATMENT AS INDICATED ON PLANS AND IN SPECS.

3. SURFACE TEXTURE SHALL BE CARRIED A MINIMUM OF 6" BELOW FINISHED GRADE ELEVATION OF CONCRETE PAVEMENT.

4. EMBEDMENTS CAST INTO TOP OF PANEL, FOR ERECTION PURPOSES, SHALL BE STAINLESS STEEL AND CONCEALED AFTER ERECTION. CAP OPENING OF EMBEDMENT SOCKETS AND COVER WITH SILICONE SEALANT.

PARSONS BRINCKERHOFF
1831 Chestnut Street
St. Louis, MO 63103-2225
Phone: 314-421-1476
Fax: 314-421-1741

Meeting of the Great Rivers Scenic Byway

Gateway Monuments- Elevations & Sections

REV	REMARKS	DATE

36004B

DATE 11/03
DRAWN JCU
CHKD DWH
APPD FJB

DRAWING NO.
6