SECTION	COUNTY	TOTAL SHEETS	SHEET NO.
01-00014-01-BT	MADISON	160	123
STA. 108+00	TO STA. 113+38.36		
SCHOOLHOUSE CONNECTOR CROSS SECTIONS			

97223

111+50

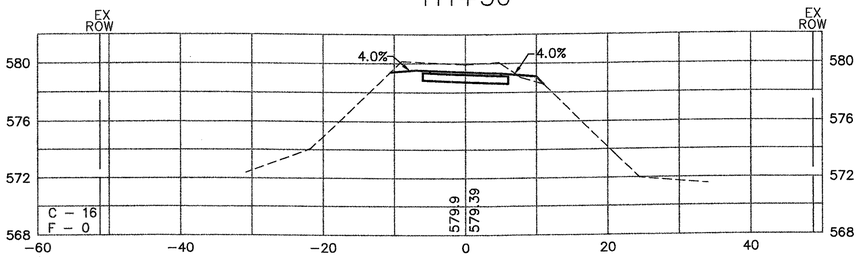

111+00

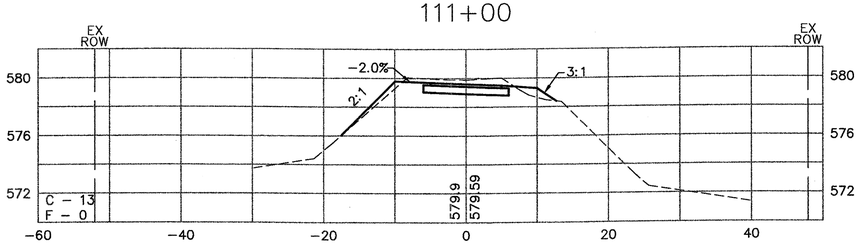

110+50

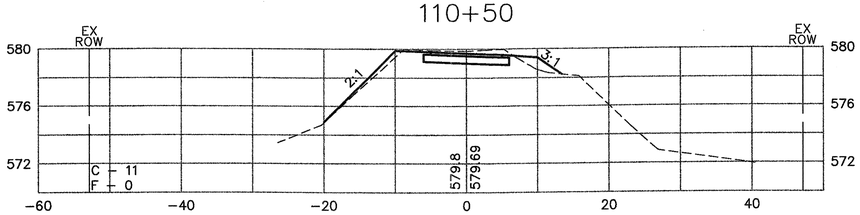

110+00

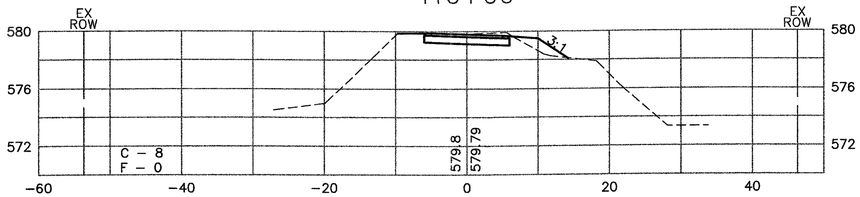

108+00

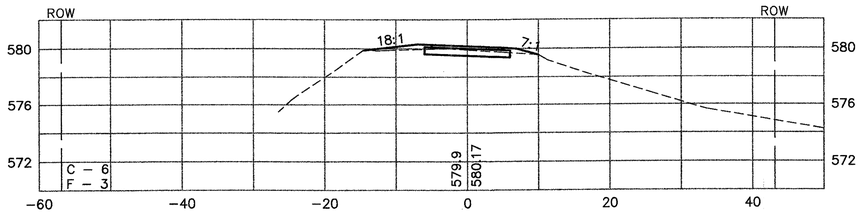

113+38.36
(PIPE CULVERT CROSSING)

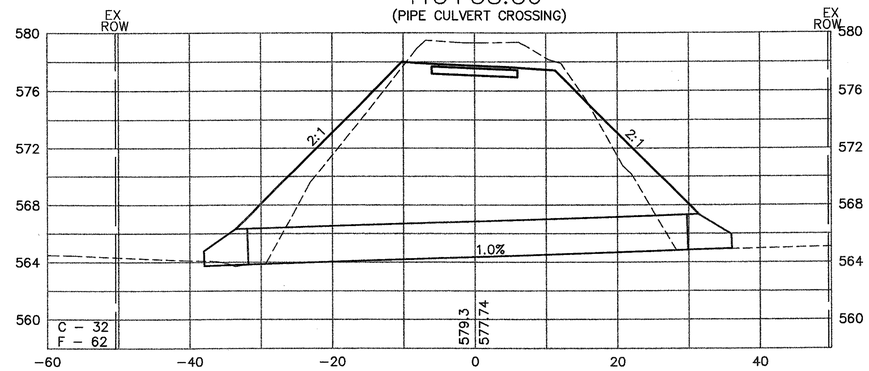

113+00

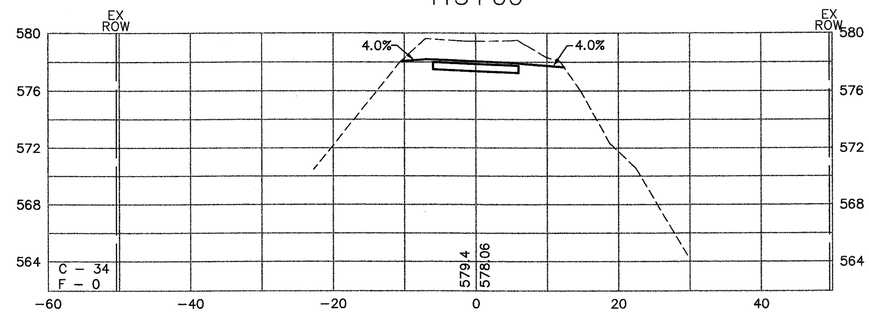

112+50

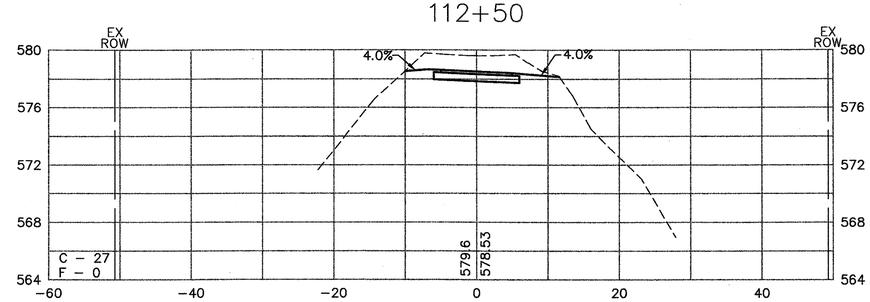

112+00

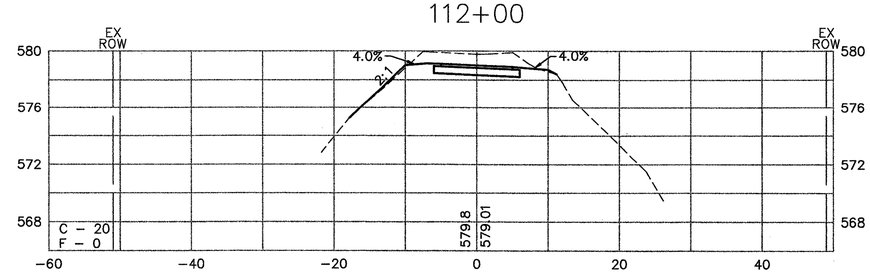

FINAL SURVEY	BY	DATE
SURVEYED		
PLOTTED		
TEMPLATE		
AREAS		
AREAS CHECKED		
NOTE BOOK NO.		

ORIGINAL SURVEY	BY	DATE
SURVEYED		
PLOTTED		
TEMPLATE		
AREAS		
AREAS CHECKED		
NOTE BOOK NO.		

H:\P\21040\dwg\140xs_sheet_heritage_bridge.dwg, 12/04/2003 03:50:05 PM